MASTER DRAWING LIST

MAINTENANCE MANUALS NO.	TITLE	UNIT VARIATIONS 7606257-0
7606257-0	DOUBLE	X
	BUFFER	
	DISK	
	CONTROL	

USED ON OPTIONS

REVISIONS: APP'D. / CHG. NO. / DATE / REV.

DRN.		DATE 6/6/72
CHK'D.		DATE 12/7/72
ENG.		DATE 12/7/72
PROJ. ENG.		DATE 12/7/72
PROD.		DATE 12/7/72
FIRST USED ON	PDP-11	
SCALE	NONE	
SHEET	1 OF 3	

digital EQUIPMENT CORPORATION MAYNARD, MASSACHUSETTS

TITLE DOUBLE BUFFER DISK CONTROL

SIZE	CODE	NUMBER	REV.
A	ML	7606257-0	

DIST.

DRA 131

Dec 16-(325)-1048-N471

PRINT SET 7606257-0	DWG. NO.	REV. LET.	NO. OF SHEETS	TITLE	OPTION NO.
X	C-UA-7606257-0-0		1	DOUBLE BUFFER DISK CONTROL	
X	D-AD-7008985-0-0		1	WIRED ASSY	
X	D-MU-7606257-0-01		2	MODULE UTILIZATION	
X	A-PL-7606257-0-01		2	MODULE UTILIZATION (PL)	
X	D-BS-7606257-0-02		1	BASIC TIMING	
X	D-BS-7606257-0-03		1	RKCS AND CONTROL	
X	D-BS-7606257-0-04		1	MAJOR STATES	
X	D-BS-7606257-0-05		1	MSR CONTROL	
X	D-BS-7606257-0-06		1	DSB AND DISK SELECTION	
X	D-BS-7606257-0-07		1	DRIVE RD WR AND SEEK CONTROL	
X	D-BS-7606257-0-08		1	RKDA AND CONTROL	
X	D-BS-7606257-0-09		1	BIT COUNTER AND INTERNAL WC	
X	D-BS-7606257-0-10		1	RKDB AND CONTROL	
X	D-BS-7606257-0-11		2	REG SEL. NPR + INT CONTROL	
X	D-BS-7606257-0-12		2	HARDWARE POLE	
X	D-BS-7606257-0-13		1	ADDER CONTROL	
X	D-BS-7606257-0-14		1	ADDERS	
X	D-BS-7606257-0-15		1	RKBA·RKWC·RKMR	
X	D-BS-7606257-0-16		1	ERRORS	
X	D-BS-7606257-0-17		1	CABLE DRIVERS AND RECEIVERS	
X	D-BS-7606257-0-18		1	BUS "D" RCVRS AND DRVRS	
X	D-BS-7606257-0-19		2	INTERNAL BUS ØØ→15	
X	D-BS-7606257-0-20		1	RKDB DATA PATHS	
X	D-BS-7606257-0-24		1	DSB/BUS→ABUF CONTROLS	
X	D-BS-7606257-0-25		1	ABUF·BBUF REG	
X	D-BS-7606257-0-26		1	INTERBUFFER CONTROL TRANSFER CONTROL	
X	D-BS-7606257-0-27		1	BUFFER CONTROL	

TITLE DOUBLE BUFFER DISK CONTROL

SHEET 2 OF 3 | SIZE A | CODE ML | NUMBER 7606257-0 | REV.

DRA 132

DEC 16-(325)-1048-1-N471

PRINT SET 7606257-0	DWG. NO.	REV. LET.	NO. OF SHEETS	TITLE	OPTION NO.
X	D-IC-7606257-0-21		1	DISK CABLE AND TERMINATION	
X	D-IC-7606257-0-22		1	UNIBUS CONNECTORS	
X	D-IC-7606257-0-23		1	RK11-C INDICATOR CONNECTIONS	
X	D-FD-7606257-0-28		4	FUNCTION FLOWS	
–	K-WL-7606257-0-29		1	WIRE LIST (DOUBLE BUFFER DISK CONTROL)	

TITLE DOUBLE BUFFER DISK CONTROL

SHEET 3 OF 3 | SIZE A | CODE ML | NUMBER 7606257-0 | REV.

DRA 132

DEC 16-(325)-1048-1-N471

DIGITAL EQUIPMENT CORPORATION
MAYNARD, MASSACHUSETTS

PARTS LIST

MADE BY PEG LENNON DATE 10-20-72
CHECKED DATE
SECTION 1
ENG DATE 10-18-72
PROD DATE 10-18-72
ISSUED SECT. 1

QUANTITY/VARIATION

ITEM NO.	DWG NO./PART NO.	DESCRIPTION	QUANTITY/VARIATION
	G736	JUMPER MODULE	1
	G740	DISK SELECTION CARD	1
	G775	CONNECTOR CARD INDICATOR PANEL	2
	M002	15 LOADS	3
	M105	ADDRESS SELECTOR	1
	M111	INVERTER	5
	M112	NOR GATE	7
	M113	10 - 2 INPUT NAND GATES	10
	M115	8 - 3 INPUT NAND GATES	4
	M116	6 - 4 QUAD NOR GATE	3
	M117	6 - 4 INPUT NAND GATES	4
	M119	3 - 8 INPUT NAND GATES	2
	M121	AND - NOR GATES	3
	M141	AND/NOR GATES	2
	M149	9 X 12 NAND WIRED OR MATRIX	12
	M161	BINARY TO OCTAL/DECIMAL DECODER	1
	M163	DUAL BINARY TO DECIMAL DECODER	1
	M203	SET RESET FLIP-FLOP MODULE	4
	M205	5 "D" FLIP-FLOPS	4
	M207	FLIP-FLOPS (3-3 CONFIGURATION)	1
	M208	BUFFER SHIFT REGISTER	6
	U214	DATA STORAGE REGISTER	3

TITLE: MODULE UTILIZATION
ASSY NO. D-MU-7606257-0-01
SHEET 1 OF 2
SIZE A CODE PL
NUMBER 7606257-0-01
REV. ECO NO.
DIST.

DEC FORM DEC 16-(325)-1031-N870
DRA 110

DIGITAL EQUIPMENT CORPORATION
MAYNARD, MASSACHUSETTS

PARTS LIST

MADE BY PEG LENNON DATE 10-26-72
CHECKED DATE
SECTION 1
ENG DATE 12-17-72
PROD DATE 12-17-72
ISSUED SECT. 1

QUANTITY/VARIATION

ITEM NO.	DWG NO./PART NO.	DESCRIPTION	QUANTITY/VARIATION
	M213	SIX FLIP-FLOPS	5
	M	12 BIT BINARY UP/DOWN COUNTER	1
	M238	SYNCHRONOUS 4-BIT UP/DOWN COUNTER	1
	M239	THREE 4-BIT COUNTER/REGISTER	2
	M304	ONE SHOT DELAY	5
	M307	INTERGRATING ONE SHOT	3
	M405	CRYSTAL CLOCK	1
	M506	PULSE GENERATOR	2
	M511	HIGH SPEED POWER INVERTER	1
	M617	6 - 4 - INPUT NOR BUFFER	1
	M623	BUS DRIVER	3
	M782	INTERRUPT CONTROL	1
	M784	UNIBUS RECEIVERS	3
	M795	WC AND CMA	1
	M796	UNIBUS MASTER CONTROL	1
	M797	REGISTER SELECT MODULE	1
	M798	UNIBUS DRIVERS	1
	M920	INTERNAL BUS CONNECTOR	2
	W130	MAINTENANCE BOARD	1

TITLE: MODULE UTILIZATION
ASSY NO. D-MU-7606257-0-01
SHEET 2 OF 2
SIZE A CODE PL
NUMBER 7606257-0-01
REV. ECO NO.
DIST.

DEC FORM DEC 16-(325)-1031-N870
DRA 110

This drawing and specifications, herein, are the property of Digital Equipment Corporation and shall not be reproduced or copied or used in whole or in part as the basis for the manufacture or sale of items without written permission.

Slot	Module	Usage	Signals
1	M927	UNIBUS IN	
2	M927	UNIBUS OUT	
3	M140	A	1→ABUF 15; 1→ABUF 13; 1→ABUF 14; 1→ABUF 11; 1→ABUF 12; 1→ABUF 10; 1→ABUF 29; 1→ABUF 08
3	M140	B	1→ABUF 27; 1→ABUF 25; 1→ABUF 26; 1→ABUF 23; 1→ABUF 24; 1→ABUF 22; 1→ABUF 21; 1→ABUF 07
4	M111	A	1→ABUF 20; 1→ABUF 06; THRU; THRU; 1→ABUF 27; 1→ABUF 15
4	M111	B	DK; E2; F2; H2; J2; K2; L2; M2; N2; P2; R2; S2; T2; U2; V2
5	M105	A	BUS SSYN IN; ADD DEC AND MSYN; OUT LO; OUT HI
5	M784	B	BUS D 15 (1); BUS D 07 (1); BUS D 14 (1); BUS D 06 (1); BUS D 13 (1); BUS D 05 (1); BUS D 12 (1); BUS D 04 (1); BUS D 11 (1); BUS D 03 (1); BUS D 10 (1); BUS D 02 (1); BUS D 09 (1); BUS D 01 (1); BUS D 08 (1); BUS D 00 (1)
6	M782***	A	BG OUT; BUS D 2; BUS; BUS D 6; BBSY; BUS D 5; INT DONE; BUS D 7; BUS D 4; BUS D 3; INT MASTER; BUS INTR; BUS SAC; NPR MASTER; BUS NPR; BG OUT; NPG OUT
6	M795	B	UNIBUS MASTER CONTROL
7	M795	A	BUS ADD REGISTER
7	M795	B	WORD COUNT REGISTER
8	M784	A	BUS CBA LO EN; INIT; BUS RKDA LO EN; FORMAT; BUS RKDB LO EN; LOST CYL; INT SSYN; INT SSYN; DR AC LO; DISK RD CLK; DR DC LO; DISK RD DATA; DR DC LO; INDX PLS; DRY; LO DEN
8	M784	B	RKDS 00 (1); DESK RES; RKDS 01 (1); WT PRCT STATUS; RKDS 02 (1); DISK RD CLK; RKDS 03 (1); SIN; R/W/S RDY; DISK RD DATA; DRY; DRIVE UNSAFE; ADD ACK; INDX PLS; ILLEGAL ADD; HI DEN
9	M117	A	DLT; RKDB BUF
9	M111	B	CHECK HEADER; HEADER OK; DLT
10	M930	A	**
10	M930	B	DISK 2 BUS
11	M113	B	DLT; RKDB BUF
12	M930	A	**
12	M930	B	DISK 1 BUS
13	M798	A	BUS D 15; BUS D 06; BUS D 14; BUS D 05; BUS D 13; BUS D 04; BUS D 12; BUS D 03; BUS D 11; BUS D 02; BUS D 10; BUS D 01; BUS D 09; BUS D 00; BUS D 08; BUS D 07
13	M736	B	INTER PRI CARD
14	M149	A	INT BUS.15; INT BUS13; INT BUS 14; INT BUS 11; INT BUS 12; INT BUS 10; INT BUS 09; INT BUS 08; BC=17 CLK LE
14	M149	B	INT BUS 07; INT BUS 05; INT BUS 06; INT BUS 03; INT BUS 04; INT BUS 02; INT BUS 01; INT BUS 00; LW IN PROG-RESS
15	M149	A	INT BUS15; INT BUS 13; INT BUS 14; INT BUS 11; INT BUS 12; INT BUS 10; INT BUS09; INT BUS 08; CLK ADDERS
15	M149	B	INT BUS 07; INT BUS 05; INT BUS 06; INT BUS 03; INT BUS 04; INT BUS 02; INT BUS 01; INT BUS 00; EQUAL
16	M149	A	INT BUS 15; INT BUS 13; INT BUS 14; INT BUS 11; INT BUS 12; INT BUS 10; INT BUS 09; INT BUS 08; COUNT MSR
16	M143	B	INT BUS 07; INT BUS 05; INT BUS 06; INT BUS 03; INT BUS 04; INT BUS 02; INT BUS 01; INT BUS 00; GEN DATA
17	M239	A	MAINT (1); FMT (1); R/W A (1); SSE (1); EX MEM01 (1); EX MEM00 (1); FUN02 (1); FUN01 (1); FUN00 (1)
17	M238	B	INIT COUNT DA (1); GATE BUS→RKDA LO; CLR SA SECTOR END (1); GATE BUS→RKDA LO
18	M239	A	INT FUN 2 THRU INT FUN 0; GATE BUS→RKDA HI; INIT RKDA; GATE BUS→RKDA HI; RKDA CRY
18	M214	B	ADD 10 (1); ADD 09 (1); ADD 08 (1); ADD 1 CRY OUT; ADD 06 (1); ADD 11 (1); ADD 07 (1)
19	M214	A	ADD 04 (1); ADD 03 (1); ADD 02 (1); ADD 00 (1); RKDB→ADD (1); ADD 05 (1); ADD 01 (1)
19	M214	B	ADD 16 (1); ADD 15 (1); ADD 14 (1); ADD 2 CRY OUT; ADD 12 (1); ADD 17 (1); ADD 13 (1)
20	M208	A	DSB 15 (0); DSB 08 (1) THRU; DSB 15 (1)
20	M208	B	DSB 00 (1) THRU; DSB 07 (1)
21	M203	A	RKDB 13; RKDB 15; RKDB 12; RKDB 14; RKDB 08; RKDB 10; RKDB 09; RKDB 11
21	M203	B	RKDB 05; RKDB 07; RKDB 04; RKDB 06; RKDB 00; RKDB 02; RKDB 01; RKDB 03
22	M149	A	1→RKDB 15; 1→RKDB 13; 1→RKDB 14; 1→RKDB 11; 1→RKDB 12; 1→RKDB 10; 1→RKDB 09; 1→RKDB 08; ACTIVE
22	M149	B	1→RKDB 07; 1→RKDB 05; 1→RKDB 06; 1→RKDB 03; 1→RKDB 04; 1→RKDB 02; 1→RKDB 01; 1→RKDB 00; DRE
23	M149	A	1→RKDB 15; 1→RKDB 13; 1→RKDB 14; 1→RKDB 11; 1→RKDB 12; 1→RKDB 09; 1→RKDB 10; 1→RKDB 08; MAINT LOG ADD INTFLS
23	M149	B	1→RKDB 07; 1→RKDB 05; 1→RKDB 06; 1→RKDB 03; 1→RKDB 04; 1→RKDB 01; 1→RKDB 02; 1→RKDB 00; NPR
24	M121	A	MASK 4; MASK 5; MASK 6; MASK 7; SEL DSK 5
24	M002	B	1→RKDB 15; THRU; 1→RKDB 01
25	M216	A	ID 1; ID 0; IDE; DR CNT 1; DR CNT 0; INH BA
25	M797	B	BUS→RKBALO EN; BUS→RKDALO EN; BUS→RKWCLO EN; BUS→RKWCHI; BUS→RKCS HI EN; BUS→RKWR LO EN; BUS→RKMR HI EN; BUS→RKCS LO EN; BUS→RKDA HI EN; BUS→RKBA HI EN
26	M141	A	INT SCH CMP; SEEK CNT; INT SCH CMP; POLE; NPR
26	M119	B	POLE; 1→HE; NO POLE; 0→RKDB
27	M304	A	+1→DR CNT (100 NS) B1; +1→DR CNT (100 NS) K2; 0→MSR (1 μS) L2; LOAD RKDB (330 NS) V1
27	M112	B	INT SCH CMP; +1→DR CNT; +1→DR CNT; POLE DONE; POLE DONE; SOFT ERR; MASK 3; MASK 2; MASK 1; MASK 0
28	M236	A	BC 0 (1) THRU; BC 3 (1); IWC 0 (1) THRU; IWC 7 (1)
28	M121	B	MASK 0; MASK 2; RD GATE; MASK 1; MASK 3; CONTROL READY
29	M205	A	WCOVF; DR CNT 2; NXS; ID 2
30	W130 CABLE	A	+8V; INT REQ; NPR; BC 2; HE; IWC 0/PRE-AMBLE; IWC 7; LAST WD; DONE; BC 3; RK BUS MASTER; HEADER; DATA; CHK; 1 SUM; LAST BIT; +8V; LAST CYL; DPL; RKDS 02; EQUAL; DISK; DATA; WT; GATE; IDE; CONTR; READY; RKDS 03; DRE; DRIVE; UNSAFE; SIN; DRY; DR AC
30	W130 CABLE	B	NO HE; IWC 5 THRU; IWC 1; BC 1; IDLE; BC 0; IWC 6; POST AMBLE; RD HEADER; WC OUF; IWC 3; ERROR; HEADER OK; NO POLE; INT; FUN 1; INT; FUN 2; SIN FLG; INT; SCH CMP; RKDS 01; RD GATE; RKDS 00; INT; FUN 2; R/W/S; SC=SA; RDY; POLE; MOVE; HEADS; DR DC; LO; SECTOR END
31	775 CABLE	A	ERROR; HE; SCH. CMP; MAINT; FMT; R/W A; SSE; CONTR; READY; IDE; EX MEM 01; EX MEM 00; +UN 02; FUN 01; FUN 00 (1); GO (1); RKDB 15 (1) THRU; RKDB 00 (1); LAST WD; DONE (1); RD GATE (1)
31	775 CABLE	B	RKDA 15 (1) THRU; RKDA 00 (1); POLE; HEADER OK (1); DSB 15 THRU; DSB 00 (1); IDLE (1)
32	775 CABLE	A	RK BUS MASTER; ADD 15 (1) THRU; ADD 00 (1); WT GATE (1); RD HEADER (1); DRE (1); OUR (1); WLD (1); SKE (1); PGE (1); NXM (1); DLT (1); RTE (1); NXD (1); NXC (1); NXS (1); CSE (1); WCE (1)
32	775 CABLE	B	INT REQ; WC OUF (1); ID 2 (1); ID 1 (1); ID 0 (1); DPL (1); HI DEN; DRIVE; UNSAFE; SIN; STD SEC; PLS; DRY; R/W/S; RDY; WT; PRCT; STATUS; SC=SA; RKDS 03 THRU; RKDS 00; PRE; AMBLE; HEADER; DATA; CHK SUM; POST AMBLE; IWC 7 THRU; IWC 0

NOTE:
- * IF RK11 IS LAST DEVICE ON THE UNIBUS, AN M930 IS INSERTED INTO THIS SLOT
- ** EACH DISK BUS REQUIRES AN M930 INSERTED ON THE LAST DISK ON EACH DISK BUS. IF NO DISK EXISTS ON A BUS, AN M930 IS INSERTED HERE INSTEAD OF THE BC11-A.
- *** MAY ALSO USE M7820, M7821.

FIRST USED ON OPTION/MODEL: PDP-11

DO NOT SCALE DRAWING
UNLESS OTHERWISE SPECIFIED DIMENSION IN INCHES
TOLERANCES: DECIMALS ± .005; FRACTIONS ± 1/64; ANGLES ± 0°30'
FINAL SURFACE QUALITY
REMOVE BURRS AND BREAK SHARP CORNERS

MATERIAL
FINISH

DRN. DATE
CHK'D. DATE
ENG. DATE
PROJ. ENG DATE
PROD. DATE

NEXT HIGHER ASSY: A-ML-760627
SCALE
SHEET 1 OF 2

REVISIONS: REV. | CHANGE NO. | CHK

DEC FORM NO. DRD 112

This drawing and specifications, herein, are the property of Digital Equipment Corporation and shall not be reproduced or copied or used in whole or in part as the basis for the manufacture or sale of items without written permission.

	1	2	3	4	5	6	7	8	9	10	11	12	13	14	15	16	17	18	19	20	21	22
	M8/6	M115	M8/6	M8/6	M8/6	M304B	M8/6	M112	M623	M623	M623	M207	G740	M116	M304B	M113	M216	M115	M121	M111	M112	M225
USAGE C	CLR FXFDON CLR SEC-WORD CLR BBUF DLYD RKDB→DSB DLYD	GATE DSB→RKDB GATE DSB→ABUF GATE BUS→ABUF READ REQ NPR	WRITE REQ NPR RKDBFL B→RKDB CLK	BUFFER SHIFT REGISTER ABUF BBUF FXFDON SEC-WORD	BUFFER SHIFT REGISTER	A→B CLK 100NS B→RKDB CLK 100NS GATE BBUF→RKDB 350NS GATE BUS→ABUF 100NS	SET BBUFFL CLR BBUFFL RKDB BUF FXFDON DLYD READ NEXT WRREQ	DOCS DSB→RKDB EN DSB→ABUF EN RKDB BUF B→RKDB CLK	DR BUS CYL ADD Ø DR BUS CYL ADD 1 DR BUS CYL ADD 2 DR BUS CYL ADD 3 DR BUS CYL ADD 4 DR BUS CYL ADD 5	DR BUS CYL ADD 6 DR BUS CYL ADD 7 DR BUS RESTORE DR BUS SEL UP-PER HD BUS A 16 BUS A 17	DR BUS WT DATA CLK DR BUS SEL DR A DR BUS SEL DR B DR BUS SEL DR C DR BUS SEL DR D	DR BUS SEC CNTR Ø DR BUS SEC CNTR 1 DR BUS SEC CNTR 2 DR BUS SEC CNTR 3 DR BUS R/W/S RDY DR BUS DRY	DR BUS STROBE DR BUS WT 1 PROTECT DR BUS RD GATE DR BUS WT GATE DR BUS ADD ACK DR BUS LOG ADD INT	DR BUS SEL DR E DR BUS SEL DR F DR BUS SEL DR H DR BUS SEL DR J CLK ADDERS Ø→ADDERS	H/L DIV 4 DISK DATA	DIV 2 WT CLK	SEL DSK Ø THRU SEL DSK 7 SELECT A THRU SELECT J	NEW FUNC-TION NPR DIV 2 CLK ADDERS 0→ADDERS	LOAD REG NORMAL HEAD SETTLE DLY	STD RD CLK 240NS STD RD DATA 100NS T2 1μS NEW FUNC-TION 1μS	MAINT DIG ADD INT PLS MAINT DIG ADD ACK PLS MAINT DIG DATA DISK DATA NPR GATE RKDB→BUS-D	MAINT SEC PLS MAINT RD CLK DISK DATA COUNT DA RK BUS MASTER	IDLE HEADER CHECK SUM	PRE-AMBLE DATA POST-AMBLE	BUS→ABUF EN GATE BUS→RKDA LO GATE BUS→RKDA HI MAINT LOG ADD INT PLS DRE	DRE DATA DRE DRE	CLK ADDERS SEL DSK 3 SEL DSK 1	1→SECTOR END DRE BAD BIT	RKDA 12 (1) RKDA 1Ø (1) RKDA Ø9 (1) RKDA Ø7 (1) RKDA Ø5 (1) R/W A (1) FMT (1) EX MEM Ø1 (1)	RKDA 11 (1) RKDA Ø8 (1) RKDA Ø6 (1) SSE (1) MAINT (1) EX MEM ØØ (1) GATE BUS RKDA HI LOAD EN	DOCS DRIVE UNSAFE INT ACC RCV H/L GATE ADDERS RKDB CLK ADDERS	NPR DSB→RKDB SEQ Ø→INT FLAGS GATE RKDA→RKDB SHIFT EN	INT XFC WRITE DATA	RDY INT MOVE HEADS NPR
	M113	M8/6	M8/6	M112	M8/6	M304B	M112	M111	M307	M307	M307	M163	M405	M161	M119	M113	M141	M115	M112	M111	M112	M117
USAGE D	CLR REQ INC WCCA WRITE REQ NPR B→RKDB CLK WRITE REQ NPR	HEADER OK DATA→ABUF EN RD→RKDB DLT	D2 F2 H2	BUFFER SHIFT REGISTER A→B CLK FXFDON NPR NEXT WRREQ	CLR FXFDON CLR SEC-WORD NORMAL READ NEXT WRREQ	BUFFER SHIFT REGISTER RD REQ 100NS WR REQ 100NS CLR FXFDON 100NS CHECK HEADER DLYD 100NS	GATE ABUF→BBUF ABUF BBUF DLT	RKDB BUF FXFDON SEC-WORD B→RKDB CLK	DSB→RKDB EN DSB→ABUF EN GATE DSB→RKDB GATE DSB→ABUF RKDB BUF GATE BUS→ABUF CLR ABUFFL	CLR EBUFFL B→RKDB CLK DATA→ABUF EN CLR FXFDON CLR SEC-WORD NPR RK NPR MASTER DOCS	S1 IN POSITION 4 HEAD SETTLE DLY	S1 IN POSITION 4 1→RD GATE S2 IN POSITION 5 1→WT GATE	S1 IN POSITION 5 HDW POLE S2 IN POSITION 4 TI	SEL DSK 7 THRU SEL DSK Ø 5.76Ø MC CLK	LATCH Ø THRU LATCH 7	CONTROL RESET WRITE SEEK DRIVE RESET READ RD CHK WT CHK	CONTROL RESET WRITE DRIVE RESET READ WRITE LOCK RD CHK WT CHK	COUNT MSR LAST WD IN PROG-RESS LAST CYL	INT BUS INT BUS INT BUS SEEK OR RESET GEN CLR Ø→ADDERS	INT BUS RKBA = ALL 1 SEEK STARTED GATE BUS RKCS LO GATE BUS RKCS HI	SC=SA SC=SA 1→XFC	R/W/S RDY 1→XFC	RD GATE EN MOVE HEADS NEW SECTOR GEN DATA 1→SECTOR END	CHECK CHK SUM ACTIVE	DR PWR LD RKDB→BUS BC=17 CLK LE 1 SECTOR END MASK 5	+1→RKBA LAST WD PROGRESS MASK 4 MASK 6 MASK 7	SEL DSK 7 SEL DSK 5 SEL DSK 4 SEL DSK 2 SEL DSK Ø GATE BUS RKCS LO RKDB DSB DR PWR LO	SEL DSK 6 SEL DSK 3 SEL DSK 1 RKDB BUS GATE BUS RKCS HI 1 SECTOR END XFER FUNCT COUNT DA	CLK LE IWC BC CLR MOVE HEADS RTE DR BUS AC LO DR BUS DC LO	GO SEL ERR HEADER OK RD HEADER Ø→MSR	EQUAL NXS SEL ERR	OVR RTE BC 17 CLK LE

	23	24	25	26	27	28	29	30	31	32	33	34	35	36	37	38	39	40	41	42	43	44
	M203	M116	M611	M113	M112	M216	M117	M113	M113	M116												
USAGE C	SCH CMP LAST SECTOR LAST WORD DONE HE DPL DRE	EQUAL EQUAL NPR 3V C24U1	DATA→ADD RKDB→ADD H/L CLR MSR LATCH 5 INIT GEN CLR CLK TE	RKDB→ADD RKDA→ADD Ø→RKDB GEN CLR + NEW SECT INIT Ø→RKMR	DPL 1→SCH CMP CLR MSR DRE SC=SA 1→RKDB ØØ	GATE RKDA→RKDB WT→WT CHK CLR SA 1→XFC 1→MOVE HEADS	PGE PGE NPR SSE (1) SOFT ERR DRIVE OK	RD WT BAD BIT NPR DRIVE OK WT GATE	DLT PGE INT SCH CMP	SKE CSE SIN FLAG	FAKE INC WC LOAD RKDB SEL ERR WT GATE XFER COND	R/W GATE 1→SECTOR END GATE ADDERS RKDB DSB→RKDB SEQ RKDB→DSB	ADDERS RKDB SEQ WRITE DATA ERROR GO	CONTR CLEAR ACTIVE COUNT MSR PROTECT SECTOR 1→SECTOR END	COUNT MSR COUNT MSR COUNT MSR XFER FUNCT 1→SECTOR END	DSB→RKDB SHIFT EN Ø→MSR	DSB→RKDB 1→HE RD GATE					
	M203	M115	M617	M304B	M113	M216	M117	M113	M205	M216												
USAGE D	RTE RD HEADER DISC IN USE NXC WLO OVR NXD WCE	WLQ GATE RKDA→RKDB RKDA RKDB→SEQ DRE WT GATE SYNC BIT FOUND SYNC OVF 1→HE	1→MOVE HEADS RD HEADER COUNT MSR INIT GEN CLR + NEW SECT GATE BUS→RKMR LO	CLK LE 100NS STD SEC PLS 1μS CHECK CHK SUM 1μS CLK TE 100NS	SC=SA SC=SA NXC SC=SA SERIAL READ DATA STD SEC PLS CHOCS INIT WCE NXD	SERIAL READ DATA END OF SYNC ADDER CONT #1 SECTOR END LAST BIT ADDER CONT #2	SYNC OVF ADDER CONT #1 ADDER CONT #2 END OF SYNC SHIFT EN BAD BIT	NEW SECTOR SIN FLAG BC Ø(1) 1→LAST WORD DONE SHIFT EN SYNC OVF WT PROTECT INT SCH CMP SHIFT EN CHECK HEADER	HEADER OK RD GATE CON-TROL READY BAD BIT WT GATE	MAINT DRY MAINT SEC CNTR 3 MAINT SEC CNTR 1	MAINT R/W/S RDY MAINT SEC CNTR 2 MAINT SEC CNTR Ø										

	1	2	3	4	5	6	7	8

REVISIONS	REV.	CHANGE NO.	CHK

DEC FORM NO. DRD 112

FIRST USED ON OPTION/MODEL: PDP-11

DO NOT SCALE DRAWING

UNLESS OTHERWISE SPECIFIED
DIMENSION IN INCHES
TOLERANCES
DECIMALS ± .005 FRACTIONS ± 1/64 ANGLES ± 0°30'
FINAL SURFACE QUALITY
REMOVE BURRS AND BREAK SHARP CORNERS

MATERIAL
FINISH

		DATE
DRN.		
CHK'D.		12-18-72
ENG.		12-18-72
PRJ. ENG		12-18-72
PROD.		12-18-72

NEXT HIGHER ASSY: A-ML-7606257-0
SCALE
SHEET 2 OF 2

digital EQUIPMENT CORPORATION MAYNARD, MASSACHUSETTS

TITLE: MODULE UTILIZATION

SIZE D | CODE MU | NUMBER 7606257-0-01 | REV.

DIST.

This drawing and specifications, herein, are the property of Digital Equipment Corporation and shall not be reproduced or copied or used in whole or in part as the basis for the manufacture or sale of items without written permission.

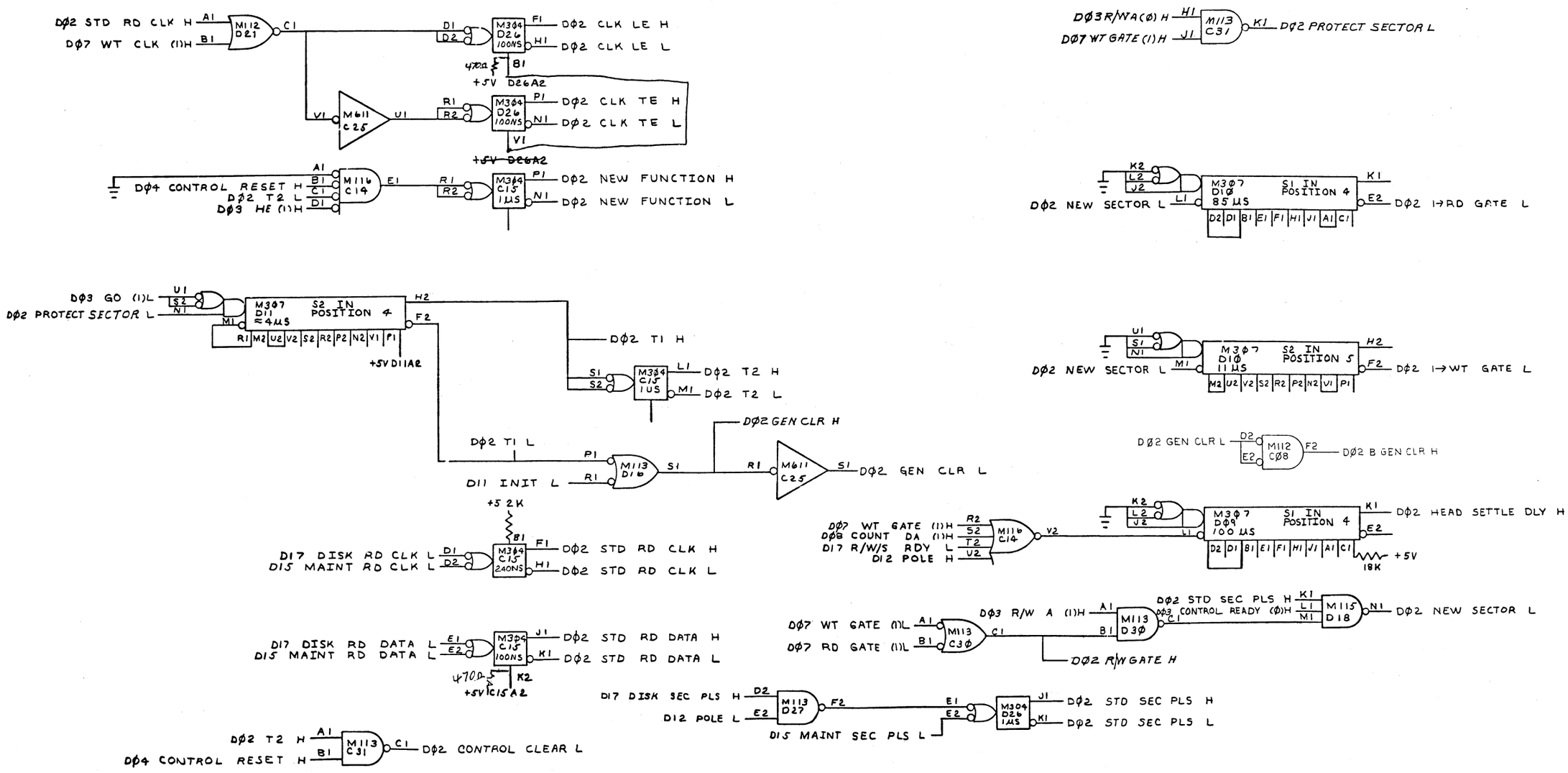

FIRST USED ON OPTION/MODEL	QTY.	DESCRIPTION	PART NO.	ITEM NO.
PDP-11		PARTS LIST		

UNLESS OTHERWISE SPECIFIED

UNLESS OTHERWISE SPECIFIED
DIMENSION IN INCHES
TOLERANCES
DECIMALS ± .005 FRACTIONS ± 1/64 ANGLES ± 0°30'
FINAL SURFACE QUALITY
REMOVE BURRS AND BREAK SHARP CORNERS

MATERIAL

FINISH

		DATE
DRN.		
CHK'D.		12-15-72
ENG.		12-15-72
PROJ. ENG.		12-15-72
PROD.		12-15-72

NEXT HIGHER ASSY: A-ML-7606257-0

SCALE

SHEET 1 OF 1

DIGITAL EQUIPMENT CORPORATION MAYNARD MASSACHUSETTS

TITLE: BASIC TIMING

SIZE D | CODE BS | NUMBER 7606257 0-02 | REV.

DIST.

REVISIONS: REV. | CHANGE NO. | CHK

DEC FORM NO DRD 102A

SIZE D | CODE BS | NUMBER 7606257-0-02 | REV.

This drawing and specifications, herein, are the property of Digital Equipment Corporation and shall not be reproduced or copied or used in whole or in part as the basis for the manufacture or sale of items without written permission.

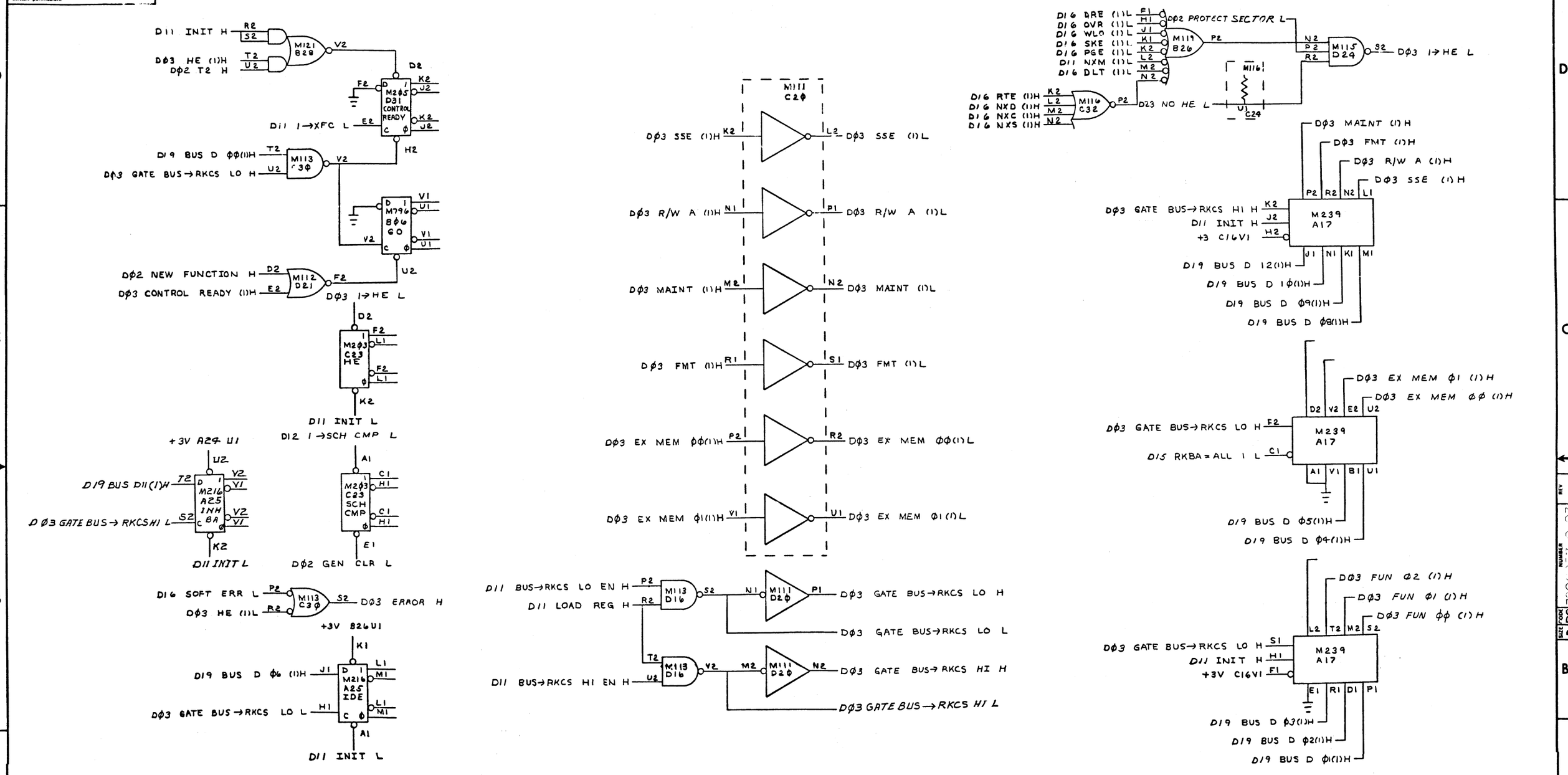

FIRST USED ON OPTION/MODEL	QTY.	DESCRIPTION	PART NO.	ITEM NO.
PDP-11		PARTS LIST		

UNLESS OTHERWISE SPECIFIED

UNLESS OTHERWISE SPECIFIED
DIMENSION IN INCHES
TOLERANCES
DECIMALS ± .005 FRACTIONS ± 1/64 ANGLES ± 0°30'
FINAL SURFACE QUALITY
REMOVE BURRS AND BREAK SHARP CORNERS

MATERIAL

FINISH

		DATE
DRN.		
CHK'D		12-18-72
ENG		12-18-72
PROJ. ENG		12-18-72
PROD.		12-18-72

NEXT HIGHER ASSY A-ML-7606257-0

SCALE

SHEET 1 OF 1

digital EQUIPMENT CORPORATION MAYNARD MASSACHUSETTS

TITLE RKCS AND CONTROL

SIZE	CODE	NUMBER	REV.
D	BS	7606257-0-03	

DIST.

REVISIONS: REV. | CHANGE NO. | CHK

DEC FORM NO. DRD 102A

This drawing and specifications, herein, are the property of Digital Equipment Corporation and shall not be reproduced or copied or used in whole or in part as the basis for the manufacture or sale of items without written permission.

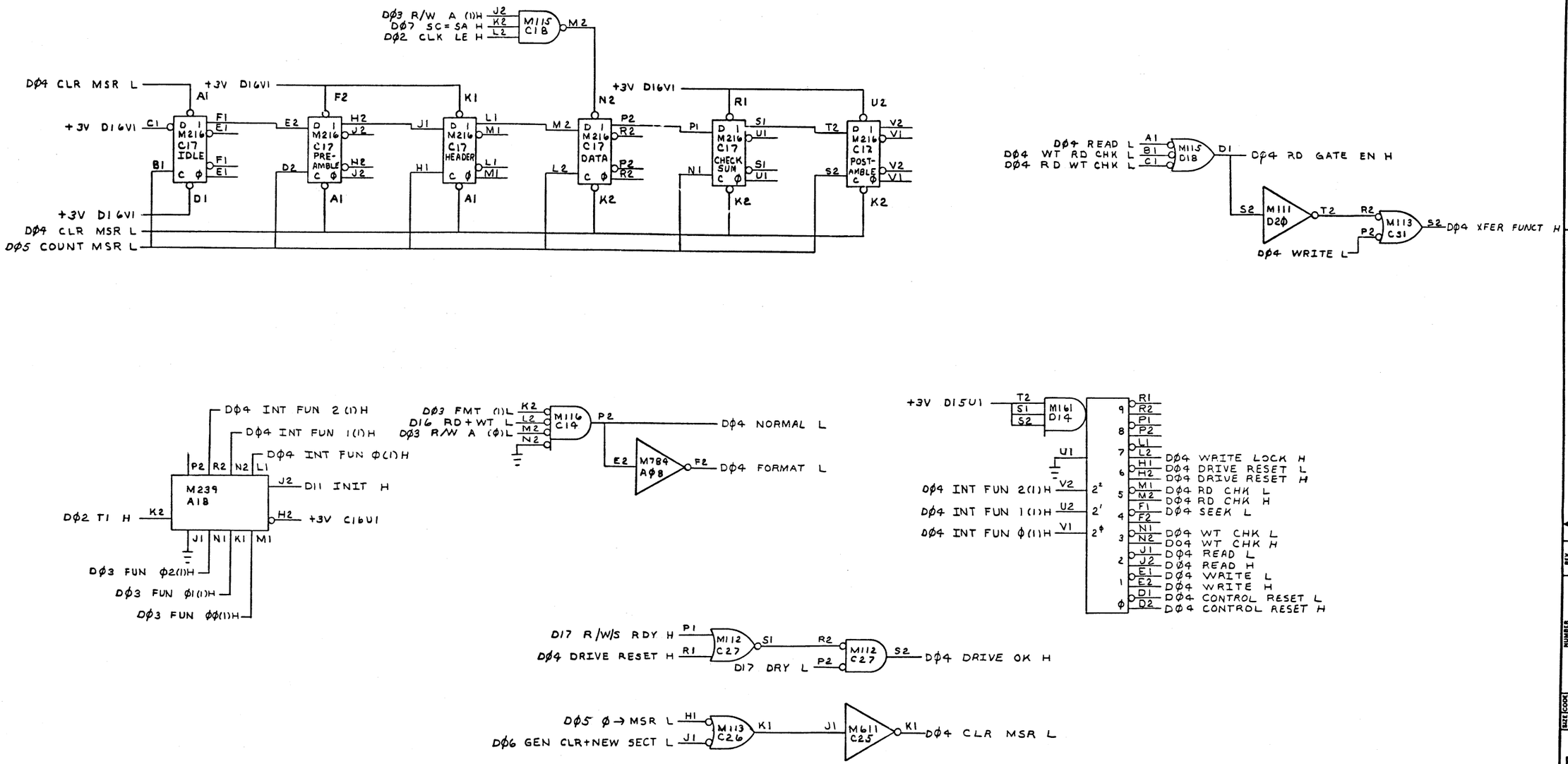

FIRST USED ON OPTION/MODEL	QTY.	DESCRIPTION	PART NO.	ITEM NO.
PDP-11		PARTS LIST		

UNLESS OTHERWISE SPECIFIED

UNLESS OTHERWISE SPECIFIED
DIMENSION IN INCHES
TOLERANCES
DECIMALS ± .005 FRACTIONS ± 1/64 ANGLES ± 0°30'
FINAL SURFACE QUALITY ✓
REMOVE BURRS AND BREAK SHARP CORNERS

MATERIAL

FINISH

		DATE
DRN.		
CHK'D		12-18-72
ENG.		12-18-72
PROJ. ENG.		12-18-72
PROD.		12-18-72

NEXT HIGHER ASSY
A-ML-7606257-0

SCALE

SHEET 1 OF 1

digital EQUIPMENT CORPORATION
MAYNARD, MASSACHUSETTS

TITLE
MAJOR STATES

SIZE	CODE	NUMBER	REV.
D	BS	7606257-0-04	

DIST.

REVISIONS
REV. | CHANGE NO. | CHK

DEC FORM NO.
DRD 102A

This drawing and specifications, herein, are the property of Digital Equipment Corporation and shall not be reproduced or copied or used in whole or in part as the basis for the manufacture or sale of items without written permission.

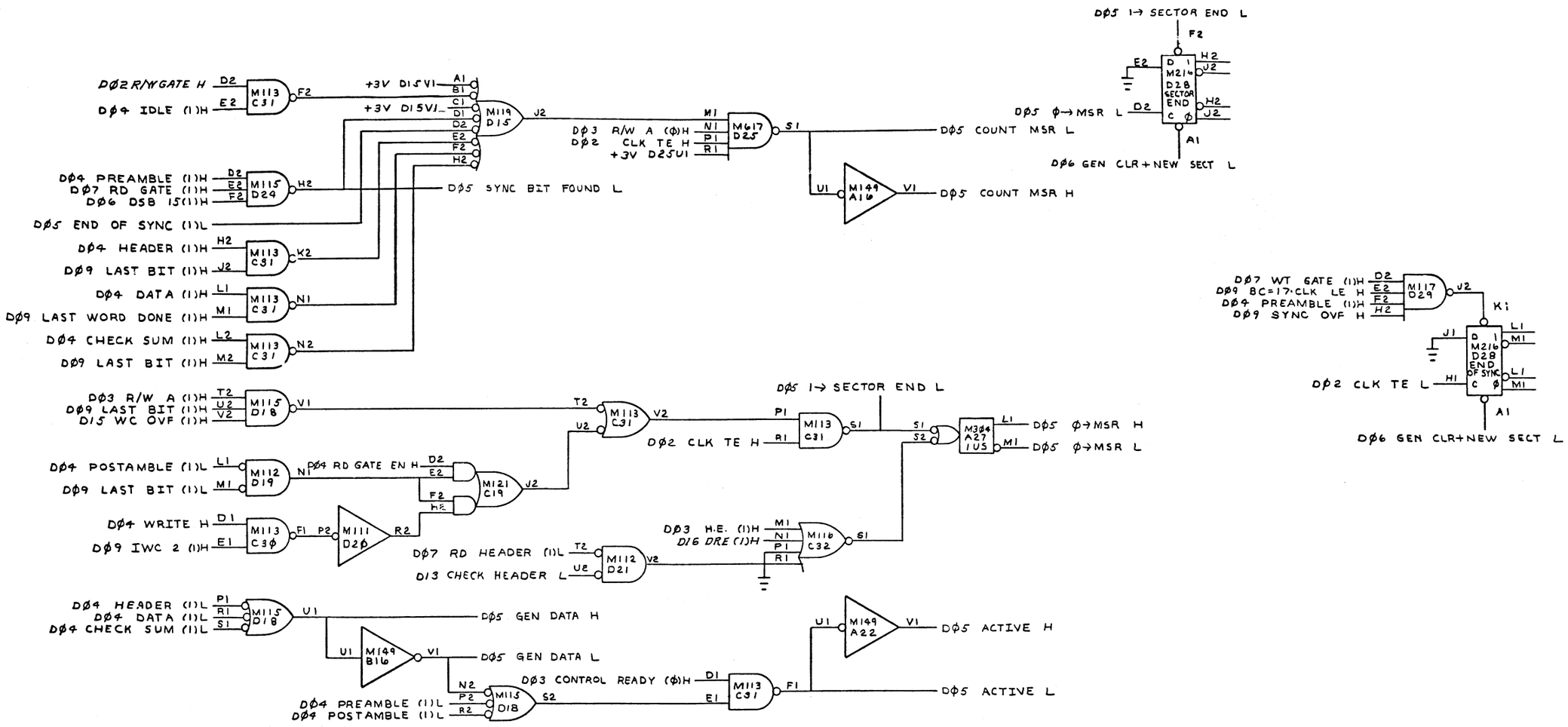

FIRST USED ON OPTION/MODEL	QTY.	DESCRIPTION	PART NO.	ITEM NO.
PDP-11		PARTS LIST		

UNLESS OTHERWISE SPECIFIED

UNLESS OTHERWISE SPECIFIED
DIMENSION IN INCHES
TOLERANCES
DECIMALS ± .005 FRACTIONS ± 1/64 ANGLES ± 0°30'
FINAL SURFACE QUALITY √
REMOVE BURRS AND BREAK SHARP CORNERS

MATERIAL

FINISH

		DATE
DRN.		
CHK'D		12-18-72
ENG.		12-18-72
PROJ. ENG.		12-18-72
PROD		12-18-72

NEXT HIGHER ASSY: A-ML-7606257-0

SCALE

SHEET 1 OF 1

digital EQUIPMENT CORPORATION MAYNARD, MASSACHUSETTS

TITLE: MSR CONTROL

SIZE D | CODE BS | NUMBER 7606257-0-05 | REV.

DIST.

REVISIONS: REV. | CHANGE NO. | CHK.

DEC FORM NO. DRD 102A

SIZE D | CODE BS | NUMBER 7606257-0-05 | REV.

This drawing and specifications, herein, are the property of Digital Equipment Corporation and shall not be reproduced or copied or used in whole or in part as the basis for the manufacture or sale of items without written permission.

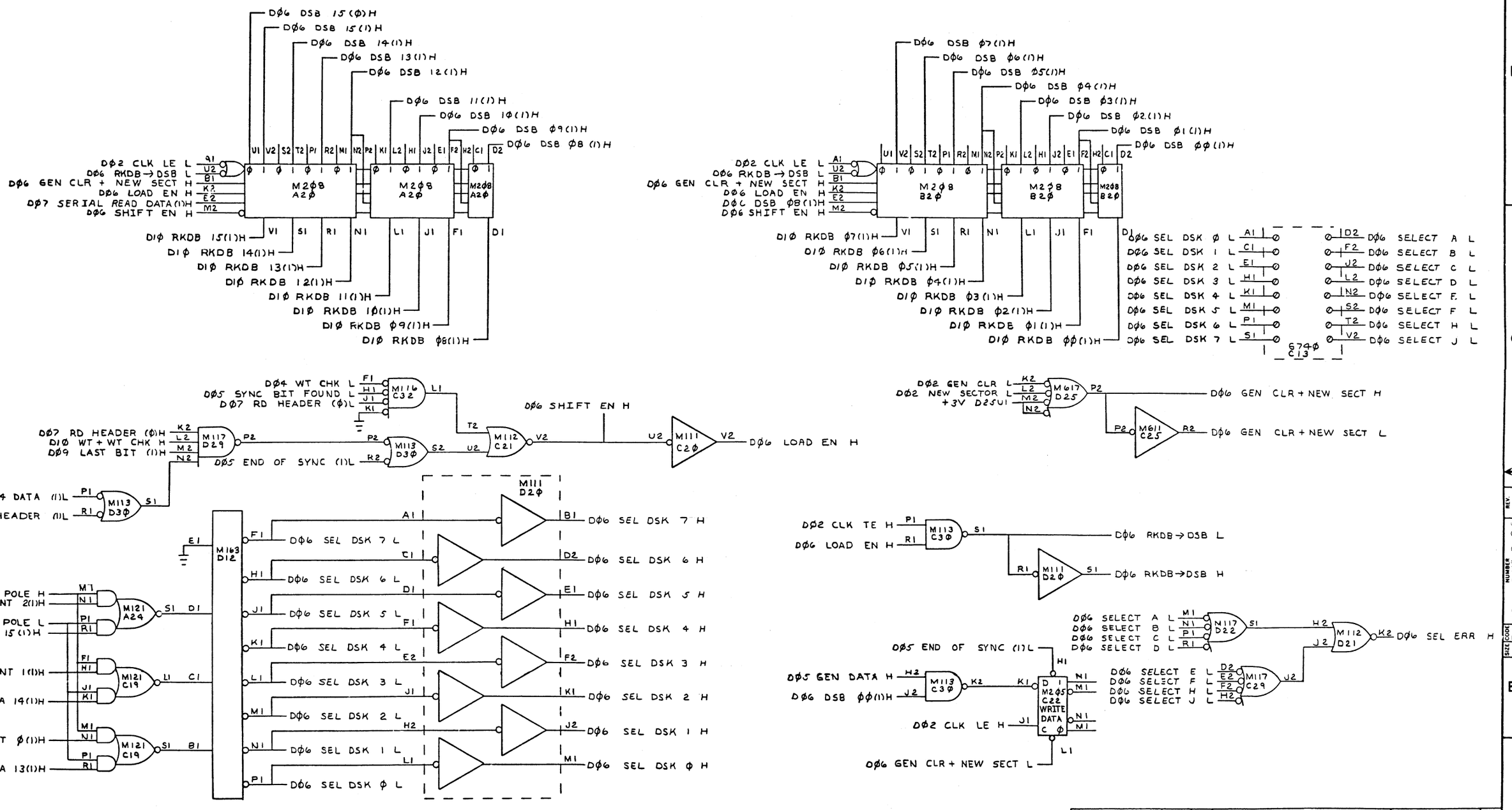

FIRST USED ON OPTION/MODEL	QTY.	DESCRIPTION	PART NO.	ITEM NO.
PDP-11		PARTS LIST		

UNLESS OTHERWISE SPECIFIED
UNLESS OTHERWISE SPECIFIED
DIMENSION IN INCHES
TOLERANCES
DECIMALS ± .005 FRACTIONS ± 1/64 ANGLES ± 0°30'
FINAL SURFACE QUALITY
REMOVE BURRS AND BREAK SHARP CORNERS

MATERIAL
FINISH

DRN DATE
CHK'D DATE 12-18-72
ENG. DATE 12-18-72
PROJ. ENG DATE 12-18-72
PROD. DATE 12-18-72
NEXT HIGHER ASSY A-ML-7Ø6267-0
SCALE
SHEET 1 OF 1

digital EQUIPMENT CORPORATION MAYNARD MASSACHUSETTS

TITLE
DSB AND DISK SELECTION

SIZE D CODE BS NUMBER 7Ø6267-0-06 REV.
DIST.

REVISIONS: REV. | CHANGE NO. | CHK

DEC FORM NO. DRD 102A

This drawing and specifications, herein, are the property of Digital Equipment Corporation and shall not be reproduced or copied or used in whole or in part as the basis for the manufacture or sale of items without written permission.

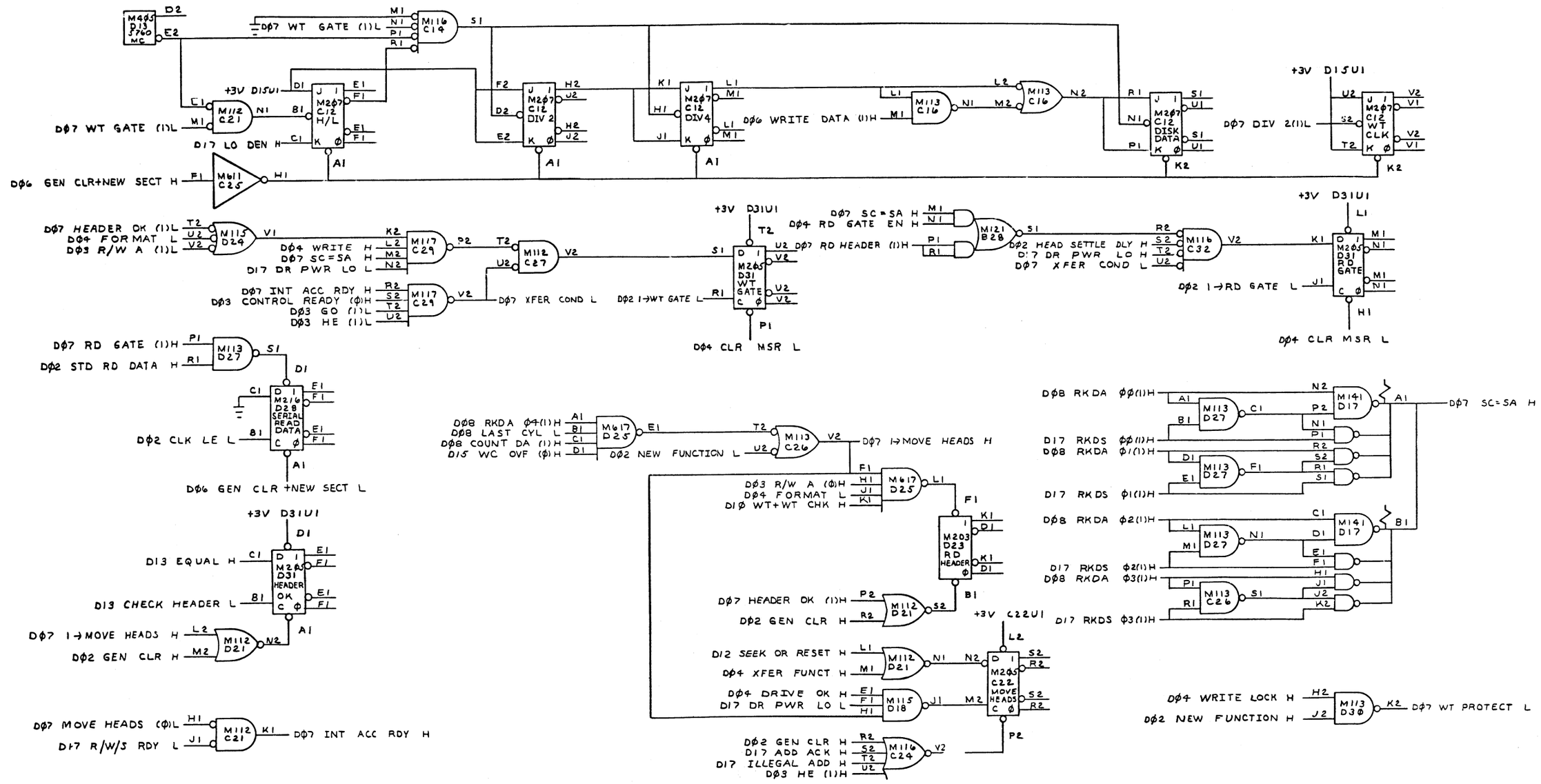

FIRST USED ON OPTION/MODEL	QTY.	DESCRIPTION	PART NO.	ITEM NO.
PDP-11		PARTS LIST		

UNLESS OTHERWISE SPECIFIED

UNLESS OTHERWISE SPECIFIED
DIMENSION IN INCHES
TOLERANCES
DECIMALS ± .015 FRACTIONS ± 1/64 ANGLES ± 0°30'
FINAL SURFACE QUALITY
REMOVE BURRS AND BREAK SHARP CORNERS

MATERIAL

FINISH

		DATE
DRN.		
CHK'D		12-18-72
ENG		12-18-72
PROJ ENG		12-18-72
PROD		12-18-72

NEXT HIGHER ASSY: A-ML-

SCALE

SHEET 1 OF 1

digital EQUIPMENT CORPORATION MAYNARD MASSACHUSETTS

TITLE: DRIVE RD WR AND SEEK CONTROL

SIZE D CODE BS NUMBER 7606257-0-07 REV.

DIST.

REVISIONS: REV. | CHANGE NO. | CHK.

DEC FORM NO. DRD 102A

This drawing and specifications, herein, are the property of Digital Equipment Corporation and shall not be reproduced or copied or used in whole or in part as the basis for the manufacture or sale of items without written permission.

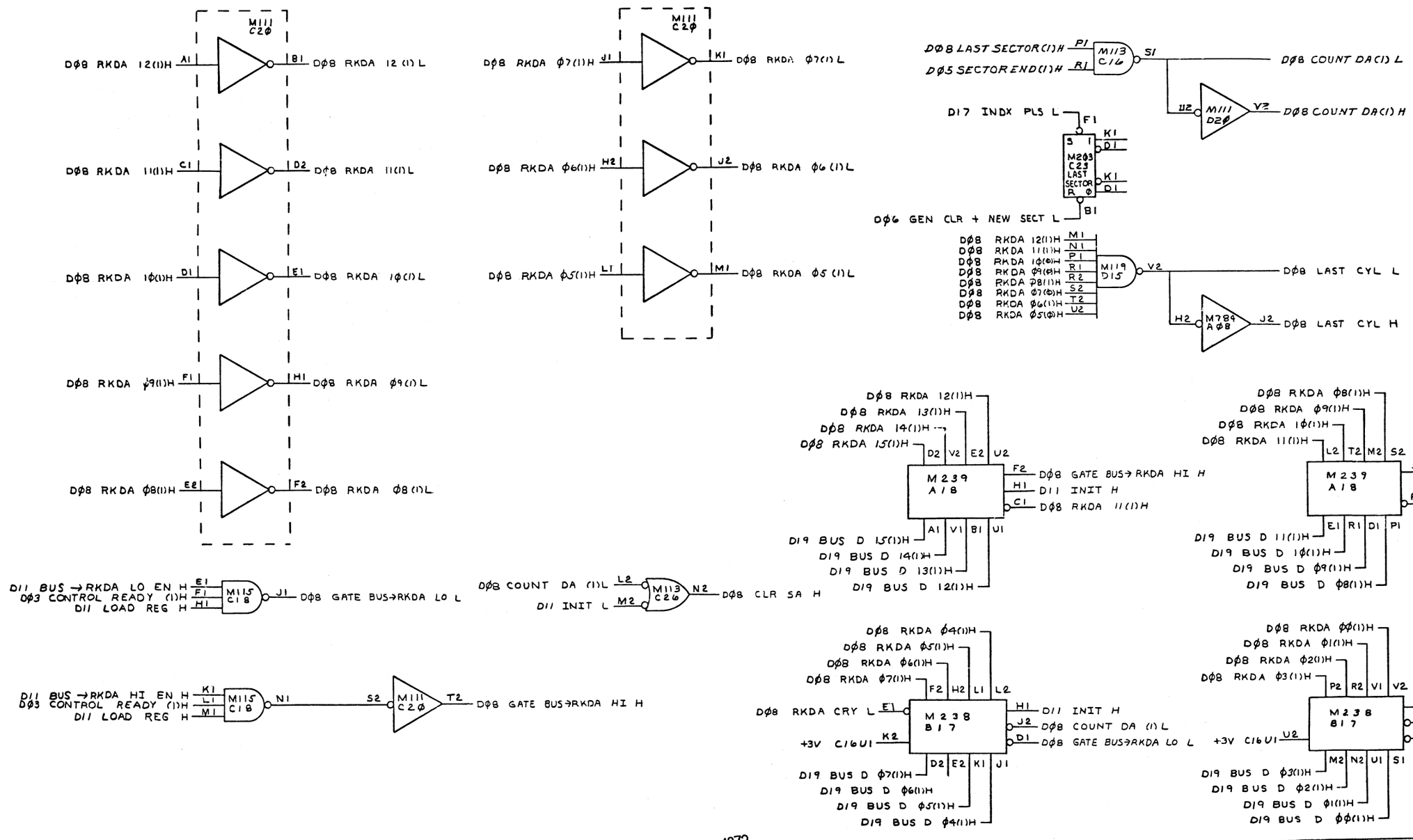

MAR 9 1973
ISSUED

FIRST USED ON OPTION/MODEL	QTY.	DESCRIPTION	PART NO.	ITEM NO.
PDP-11		PARTS LIST		

UNLESS OTHERWISE SPECIFIED

UNLESS OTHERWISE SPECIFIED
DIMENSION IN INCHES
TOLERANCES
DECIMALS ± .005 FRACTIONS ± 1/64 ANGLES ± 0°30'
FINAL SURFACE QUALITY
REMOVE BURRS AND BREAK SHARP CORNERS

MATERIAL

FINISH

		DATE
DRN.		
CHK'D.		12-18-72
ENG.		12-18-72
PROJ. ENG.		12-18-72
PROD.		12-18-72

NEXT HIGHER ASSY A-ML-760[illegible]

SCALE

SHEET 1 OF 1

digital EQUIPMENT CORPORATION MAYNARD MASSACHUSETTS

TITLE RKDA AND CONTROL

SIZE D CODE BS NUMBER 760[illegible]7-0-08 REV.

DIST.

REVISIONS REV. CHANGE NO. CHK

DEC FORM NO DRD 102A

This drawing and specifications, herein, are the property of Digital Equipment Corporation and shall not be reproduced or copied or used in whole or in part as the basis for the manufacture or sale of items without written permission.

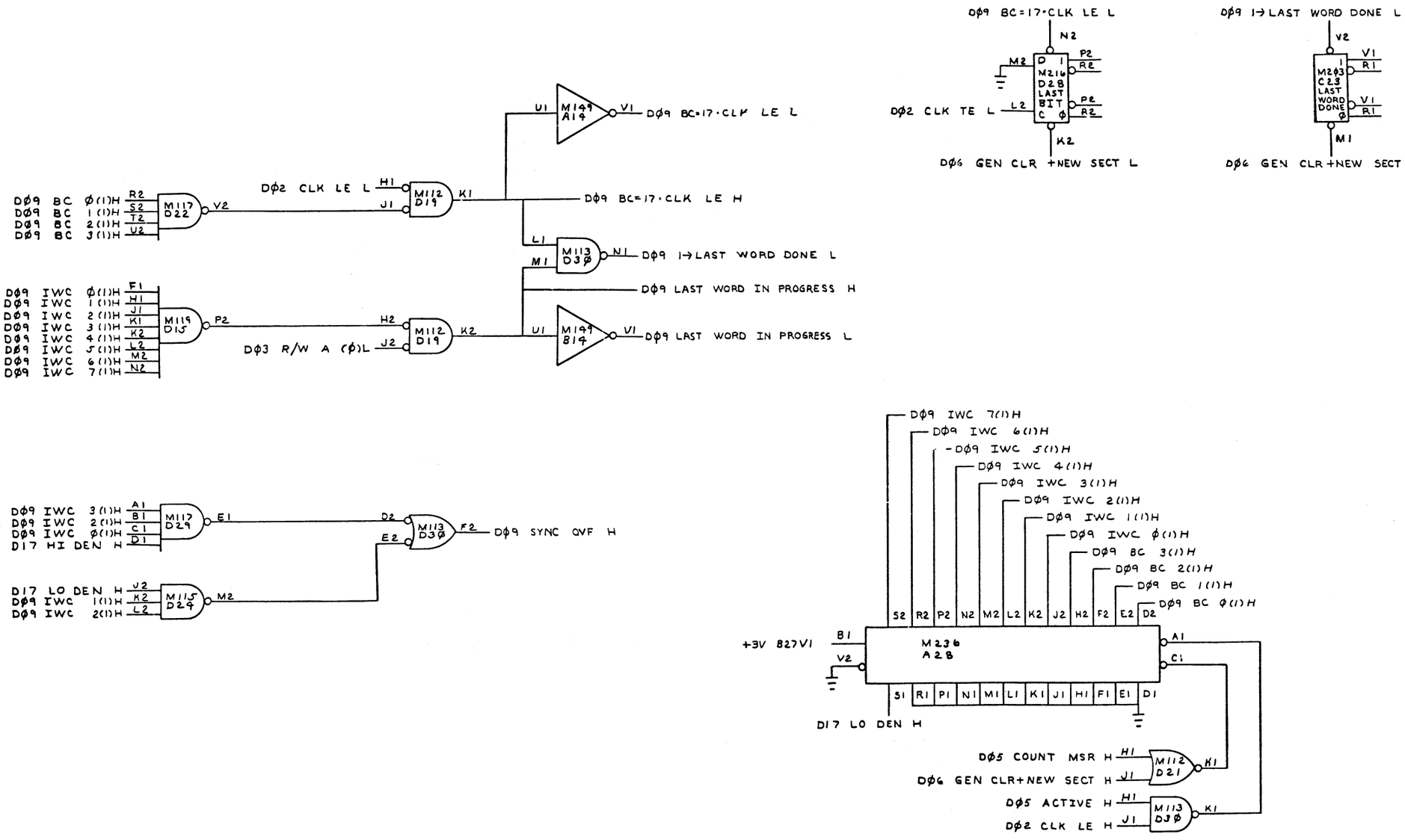

MAR 9 1973
ISSUED

FIRST USED ON OPTION/MODEL	QTY.	DESCRIPTION	PART NO.	ITEM NO.
PDP-11		PARTS LIST		

UNLESS OTHERWISE SPECIFIED

UNLESS OTHERWISE SPECIFIED
DIMENSION IN INCHES
TOLERANCES
DECIMALS ± .005 FRACTIONS ± 1/64 ANGLES ± 0°30'
FINAL SURFACE QUALITY
REMOVE BURRS AND BREAK SHARP CORNERS

MATERIAL

FINISH

		DATE
DRN.		
CHK'D.		12-18-72
ENG.		12-18-72
PROJ. ENG.		12-18-72
PROD.		12-18-72

NEXT HIGHER ASSY
A-ML760[illegible]57-0

SCALE

SHEET 1 OF 1

digital EQUIPMENT CORPORATION
MAYNARD, MASSACHUSETTS

TITLE
BIT COUNTER AND INTERNAL WC

SIZE D CODE BS NUMBER 7[illegible]-0-0[illegible] REV.

DIST.

REVISIONS	CHANGE NO.	REV.
CHK		

DEC FORM NO. DRD 102A

This drawing and specifications, herein, are the property of Digital Equipment Corporation and shall not be reproduced or copied or used in whole or in part as the basis for the manufacture or sale of items without written permission.

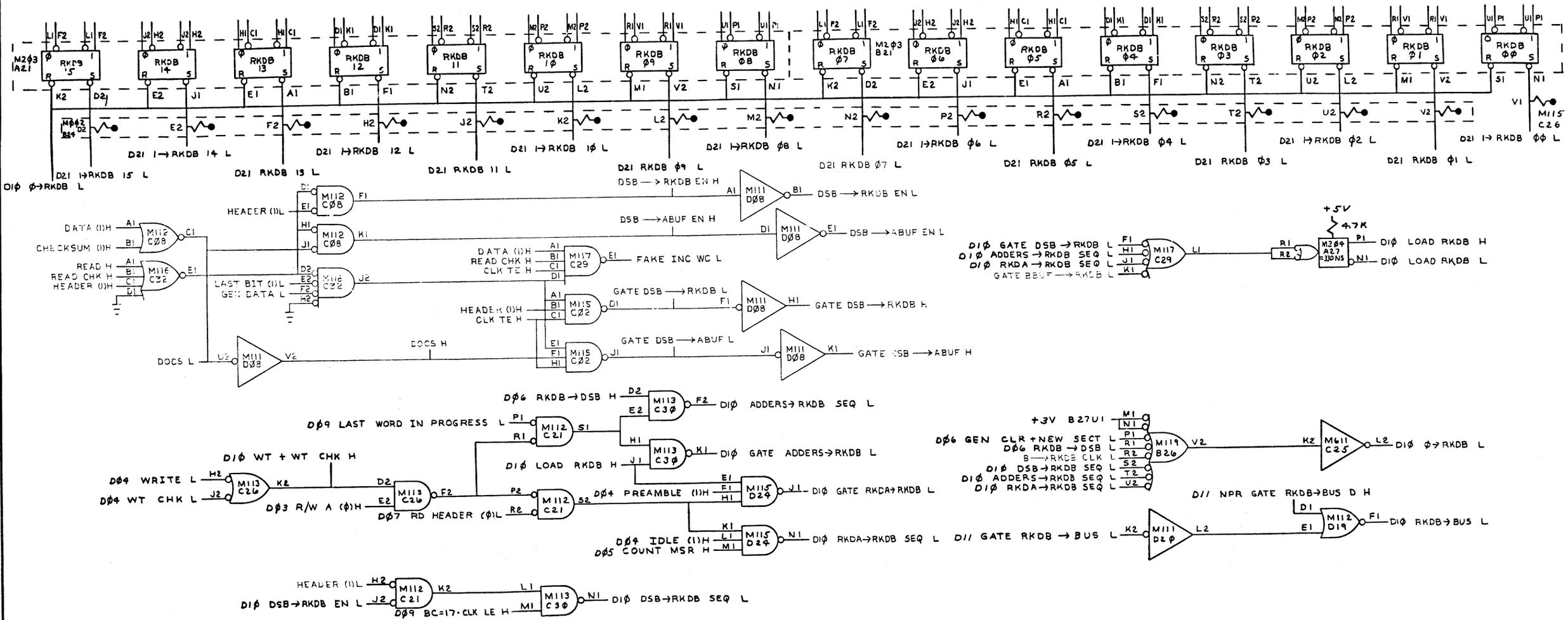

FIRST USED ON OPTION/MODEL	QTY.	DESCRIPTION	PART NO.	ITEM NO.
PDP-11		PARTS LIST		

UNLESS OTHERWISE SPECIFIED

UNLESS OTHERWISE SPECIFIED
DIMENSION IN INCHES
TOLERANCES
DECIMALS ± .005 FRACTIONS ± 1/64 ANGLES ± 0°30'
FINAL SURFACE QUALITY
REMOVE BURRS AND BREAK SHARP CORNERS

MATERIAL

FINISH

		DATE
DRN.		
CHK'D.		12-18-72
ENG.		2-18-72
PROJ. ENG.		12-18-72
PROD.		12-18-72

NEXT HIGHER ASSY A-ML-[illegible]277-0

SCALE

SHEET 1 OF 1

digital EQUIPMENT CORPORATION MAYNARD MASSACHUSETTS

TITLE RKDB AND CONTROL

SIZE	CODE	NUMBER	REV.
D	BS	76[illegible]277-0-0	

DIST.

REVISIONS	CHANGE NO.	REV.
CHK		

DEC FORM NO. DRD 102A

This drawing and specifications, herein, are the property of Digital Equipment Corporation and shall not be reproduced or copied or used in whole or in part as the basis for the manufacture or sale of items without written permission.

NOTES:
* M782 CAN BE REPLACED WITH EITHER M7820 OR M7821 IN LOCATION A06.

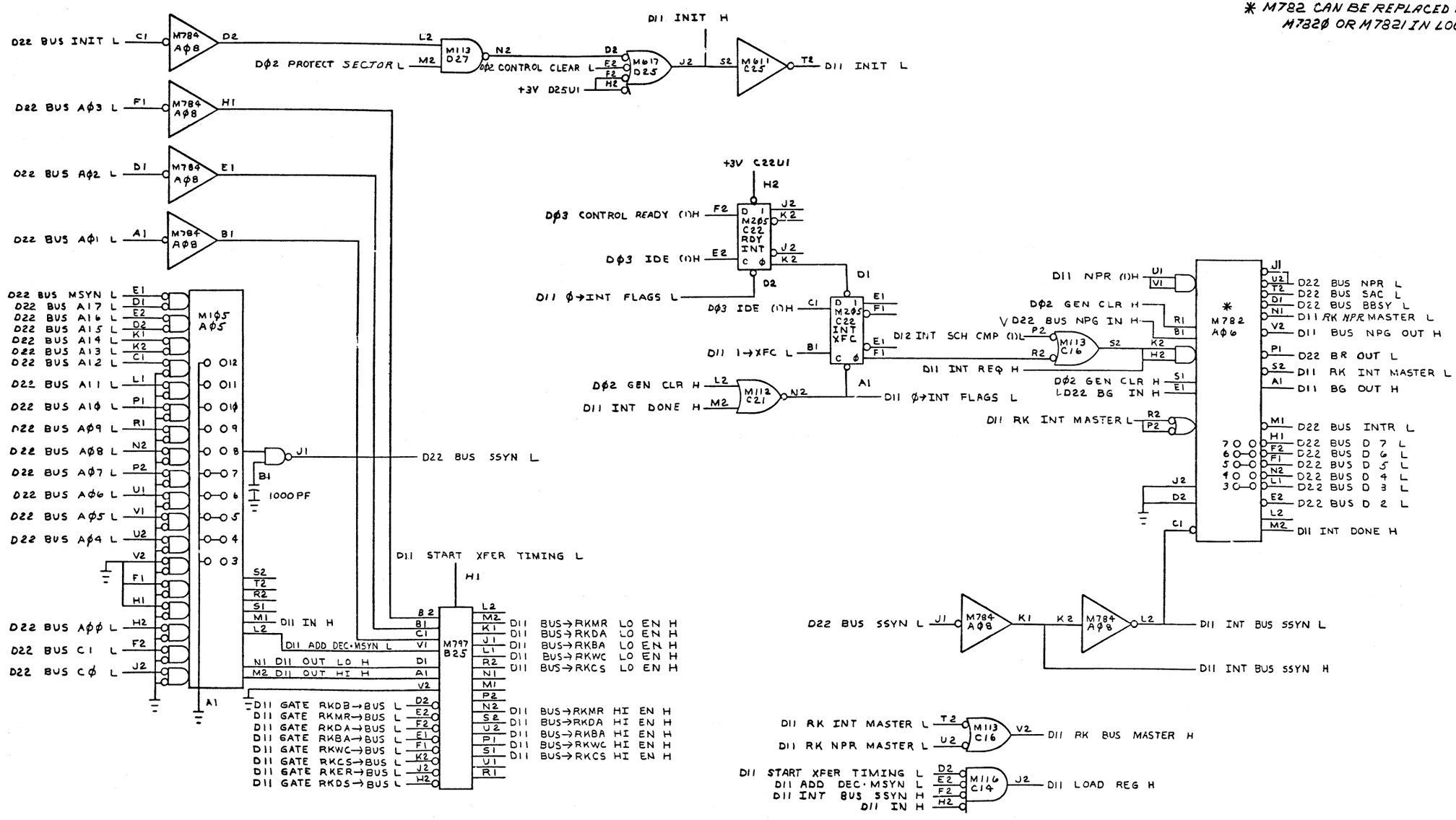

FIRST USED ON OPTION/MODEL	QTY.	DESCRIPTION	PART NO.	ITEM NO.
PDP-11		PARTS LIST		

UNLESS OTHERWISE SPECIFIED
DIMENSION IN INCHES
TOLERANCES
DECIMALS ± .005 FRACTIONS ± 1/64 ANGLES ± 0°30'
FINAL SURFACE QUALITY
REMOVE BURRS AND BREAK SHARP CORNERS

MATERIAL
FINISH

DRN. DATE
CHK'D. DATE 12-18-72
ENG. DATE 12-18-72
PROJ. ENG. DATE 12-18-72
PROD. DATE 12-18-72
NEXT HIGHER ASSY A-ML-76.06.257-0
SCALE
SHEET 1 OF 2

digital EQUIPMENT CORPORATION MAYNARD MASSACHUSETTS

TITLE REG SEL, NPR & INT CONTROL

SIZE D CODE BS NUMBER 76.06.257-0-11 REV.
DIST.

REVISIONS: REV. / CHANGE NO. / CHK

DEC FORM NO. DRD 102A

This drawing and specifications, herein, are the property of Digital Equipment Corporation and shall not be reproduced or copied or used in whole or in part as the basis for the manufacture or sale of items without written permission.

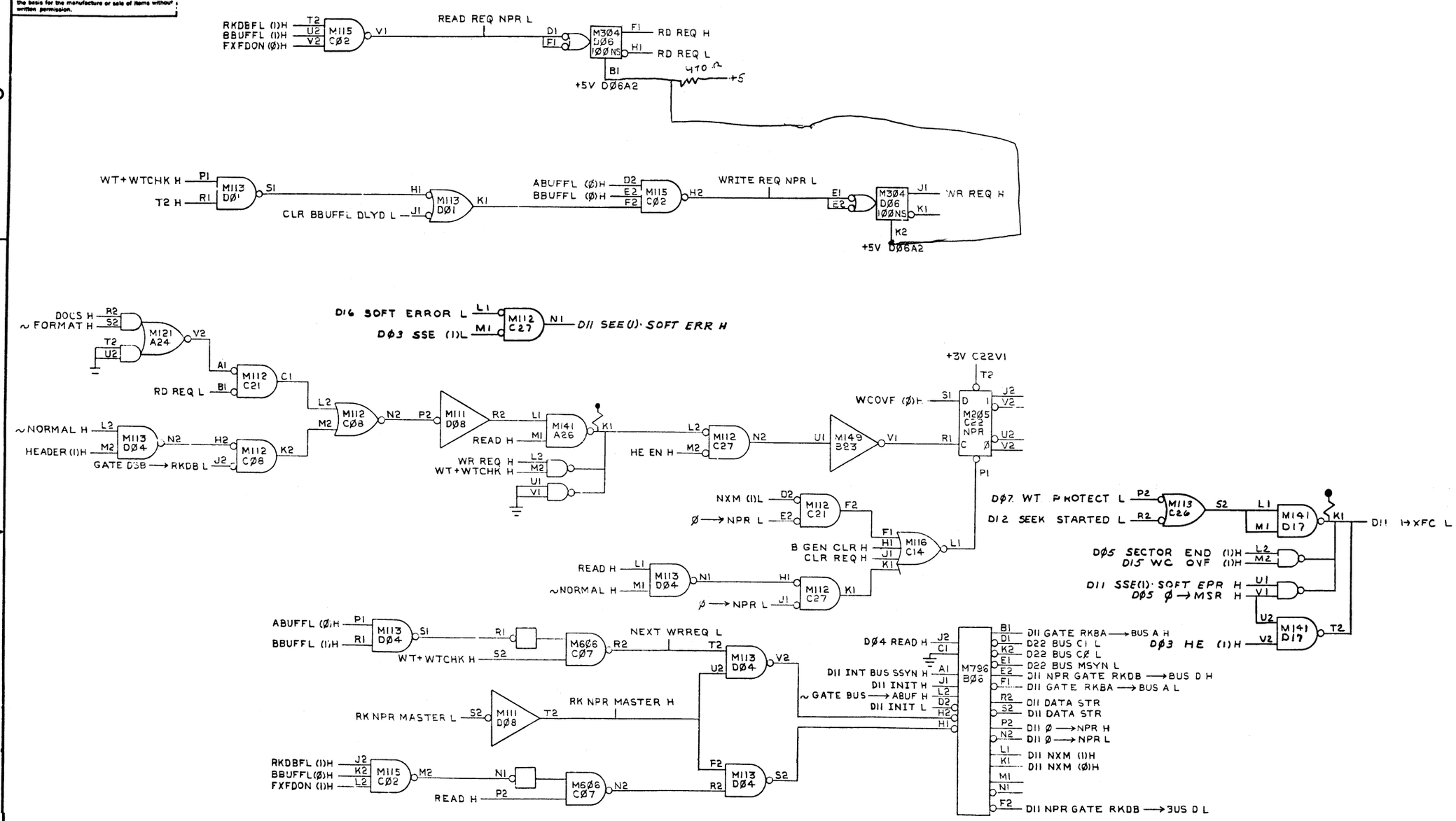

FIRST USED ON OPTION/MODEL	QTY.	DESCRIPTION	PART NO.	ITEM NO.
PDP-11		PARTS LIST		

UNLESS OTHERWISE SPECIFIED

UNLESS OTHERWISE SPECIFIED
DIMENSION IN INCHES
TOLERANCES
DECIMALS ± .005 FRACTIONS ± 1/64 ANGLES ± 0°30'
FINAL SURFACE QUALITY
REMOVE BURRS AND BREAK SHARP CORNERS

MATERIAL

FINISH

		DATE
DRN.		12-17-72
CHK'D		12-18-72
ENG.		12-18-72
PROJ. ENG		12-18-72
PROD		12-18-72

NEXT HIGHER ASSY
A-ML-7606257-0

SCALE —

SHEET 2 OF 2

digital EQUIPMENT CORPORATION
MAYNARD MASSACHUSETTS

TITLE
REG SEL NPR & INT CONTROL

SIZE	CODE	NUMBER	REV.
D	BS	7606257-0-11	

DIST.

REVISIONS	CHANGE NO.	REV.
CHK		

DEC FORM NO. DRD 102A

This drawing and specifications, herein, are the property of Digital Equipment Corporation and shall not be reproduced or copied or used in whole or in part as the basis for the manufacture or sale of items without written permission.

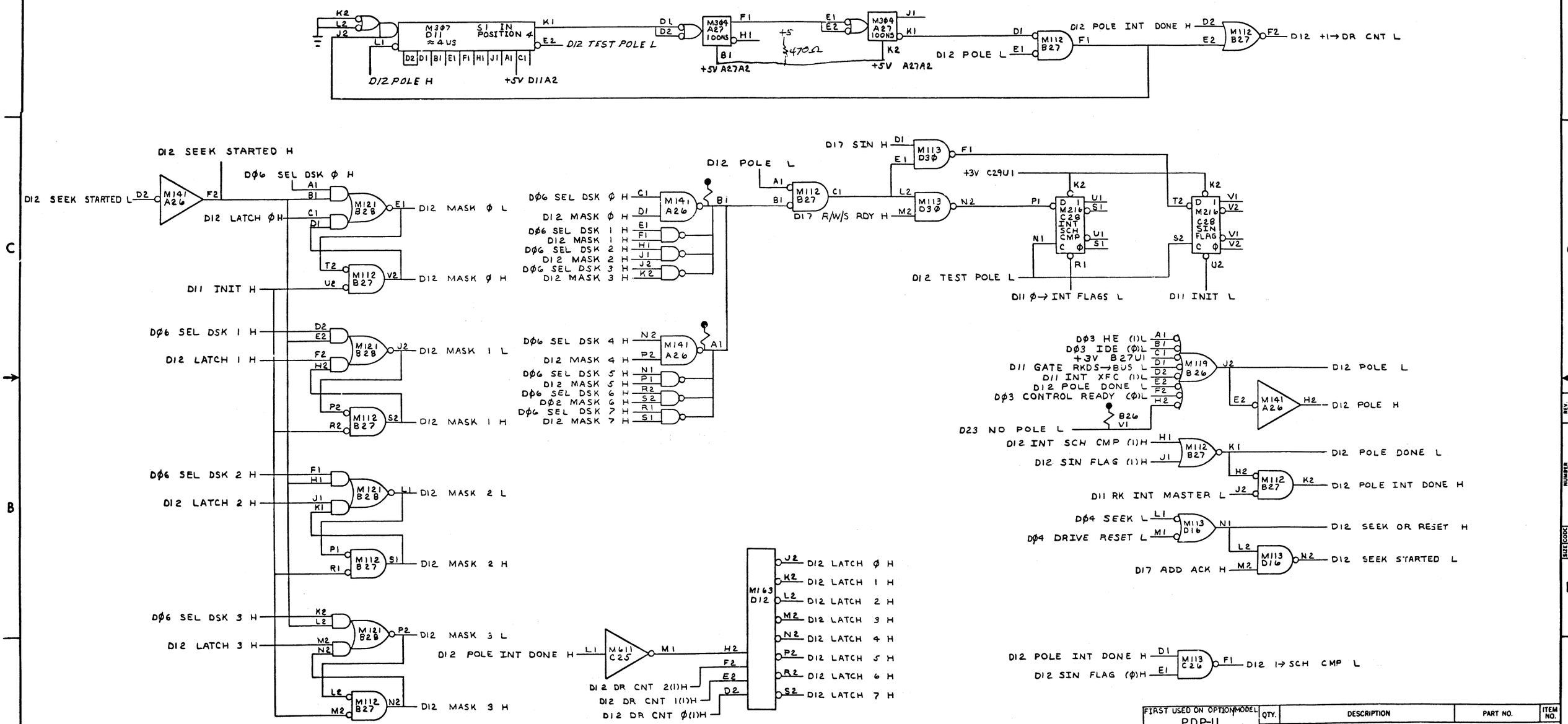

FIRST USED ON OPTION MODEL	QTY.	DESCRIPTION	PART NO.	ITEM NO.
PDP-11		PARTS LIST		

UNLESS OTHERWISE SPECIFIED

UNLESS OTHERWISE SPECIFIED
DIMENSION IN INCHES
TOLERANCES
DECIMALS ± .005 FRACTIONS ± 1/64 ANGLES ± 0°30'
FINAL SURFACE QUALITY ✓
REMOVE BURRS AND BREAK SHARP CORNERS

MATERIAL —

FINISH —

		DATE
DRN.		
CHK'D.		12-18-72
ENG.		12-18-72
PROJ. ENG.		12-18-72
PROD.		12-18-72

NEXT HIGHER ASSY: A-ML-760625?-0

SCALE —

SHEET 1 OF 2

digital EQUIPMENT CORPORATION MAYNARD MASSACHUSETTS

TITLE: HARDWARE POLE

SIZE D | CODE BS | NUMBER 760625?-0-12 | REV.

DIST.

REVISIONS: REV. | CHANGE NO. | CHK

DEC FORM NO. DRD 102A

This drawing and specifications, herein, are the property of Digital Equipment Corporation and shall not be reproduced or copied or used in whole or in part as the basis for the manufacture or sale of items without written permission.

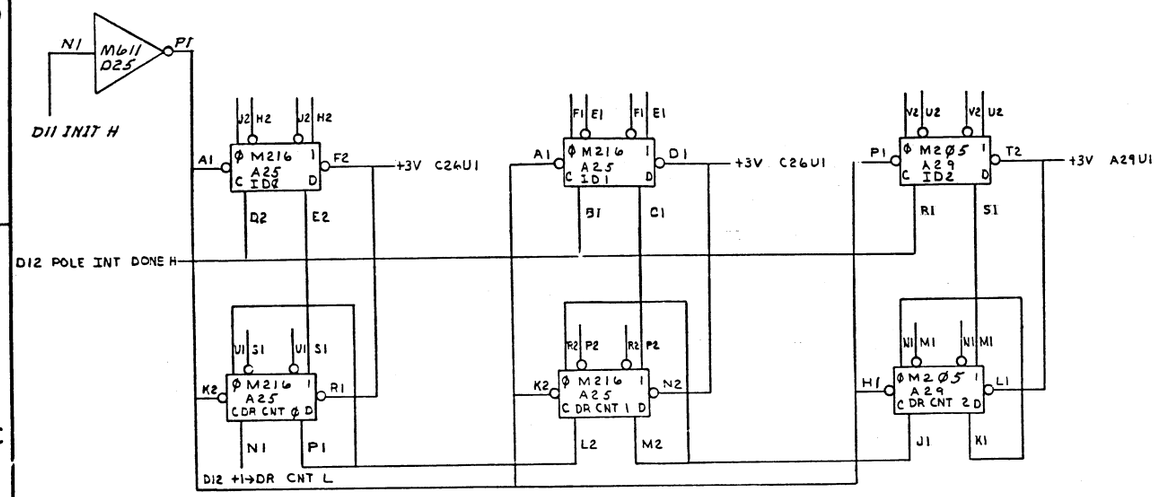

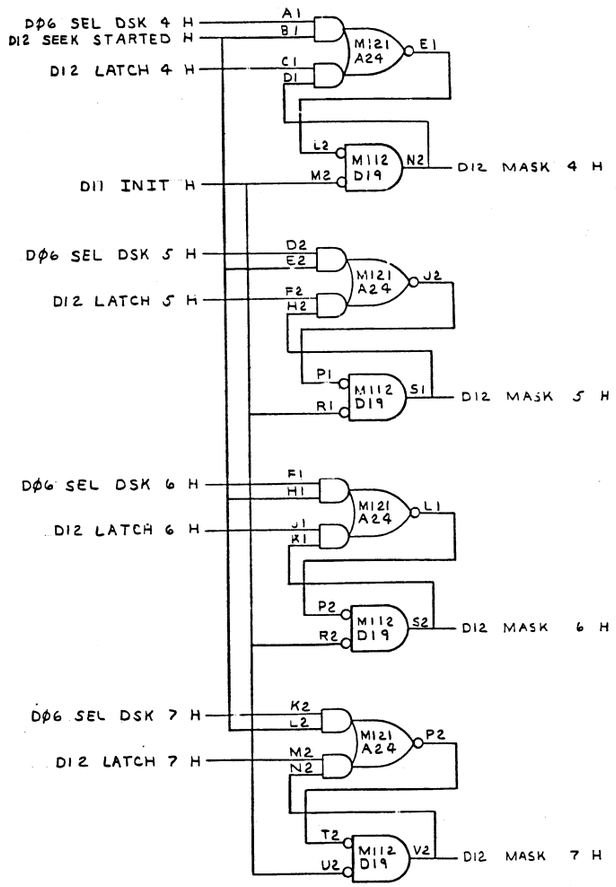

FIRST USED ON OPTION/MODEL	QTY.	DESCRIPTION	PART NO.	ITEM NO.
PDP-11		PARTS LIST		

UNLESS OTHERWISE SPECIFIED

UNLESS OTHERWISE SPECIFIED
DIMENSION IN INCHES
TOLERANCES
DECIMALS ± .005 FRACTIONS ± 1/64 ANGLES ± 0°30'
FINAL SURFACE QUALITY
REMOVE BURRS AND BREAK SHARP CORNERS

MATERIAL —/—

FINISH —/—

		DATE
DRN		1-1-72
CHK'D		12-18-72
ENG.		12-18-72
PROJ. ENG.		12-18-72
PROD.		12-18-72

NEXT HIGHER ASSY A-ML760625?-0

SCALE —/—

SHEET 2 OF 2

digital EQUIPMENT CORPORATION MAYNARD MASSACHUSETTS

TITLE HARDWARE POLE

SIZE	CODE	NUMBER	REV.
D	BS	760625?-0-12	

DIST.

REVISIONS

CHK	CHANGE NO.	REV.

DEC FORM NO. DRD 102A

This drawing and specifications, herein, are the property of Digital Equipment Corporation and shall not be reproduced or copied or used in whole or in part as the basis for the manufacture or sale, in whole or in part, without written permission.

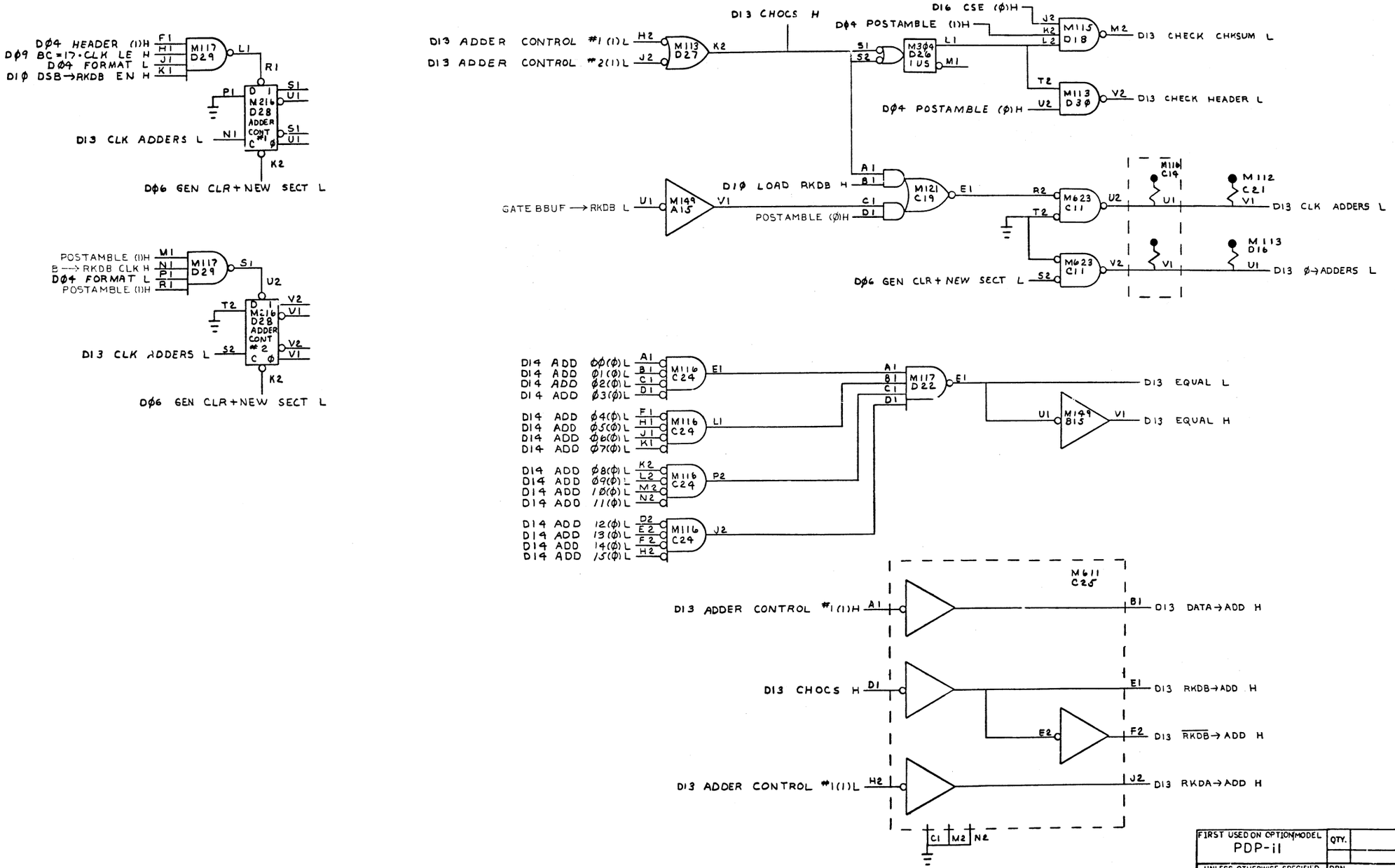

FIRST USED ON OPTION/MODEL	QTY.	DESCRIPTION	PART NO.	ITEM NO.
PDP-11		PARTS LIST		

UNLESS OTHERWISE SPECIFIED

UNLESS OTHERWISE SPECIFIED
DIMENSION IN INCHES
TOLERANCES
DECIMALS ± .005 FRACTIONS ± 1/64 ANGLES ± 0°30'
FINAL SURFACE QUALITY
REMOVE BURRS AND BREAK SHARP CORNERS

MATERIAL

FINISH

		DATE
DRN.		
CHK'D.		12-1-72
ENG.		12-1-72
PROJ. ENG.		12-1-72
PROD.		12-1-72

NEXT HIGHER ASSY: A-ML-7606257-0

SCALE

SHEET 1 OF 1

digital EQUIPMENT CORPORATION MAYNARD MASSACHUSETTS

TITLE: ADDER CONTROL

SIZE	CODE	NUMBER	REV.
D	BS	7606257-0-13	

DIST.

REVISIONS		
CHK	CHANGE NO.	REV.

DEC FORM NO. DRD 102A

SIZE D CODE BS NUMBER 7606257-0-13 REV.

This drawing and specifications, herein, are the property of Digital Equipment Corporation and shall not be reproduced or copied or used in whole or in part as the basis for the manufacture or sale of items without written permission.

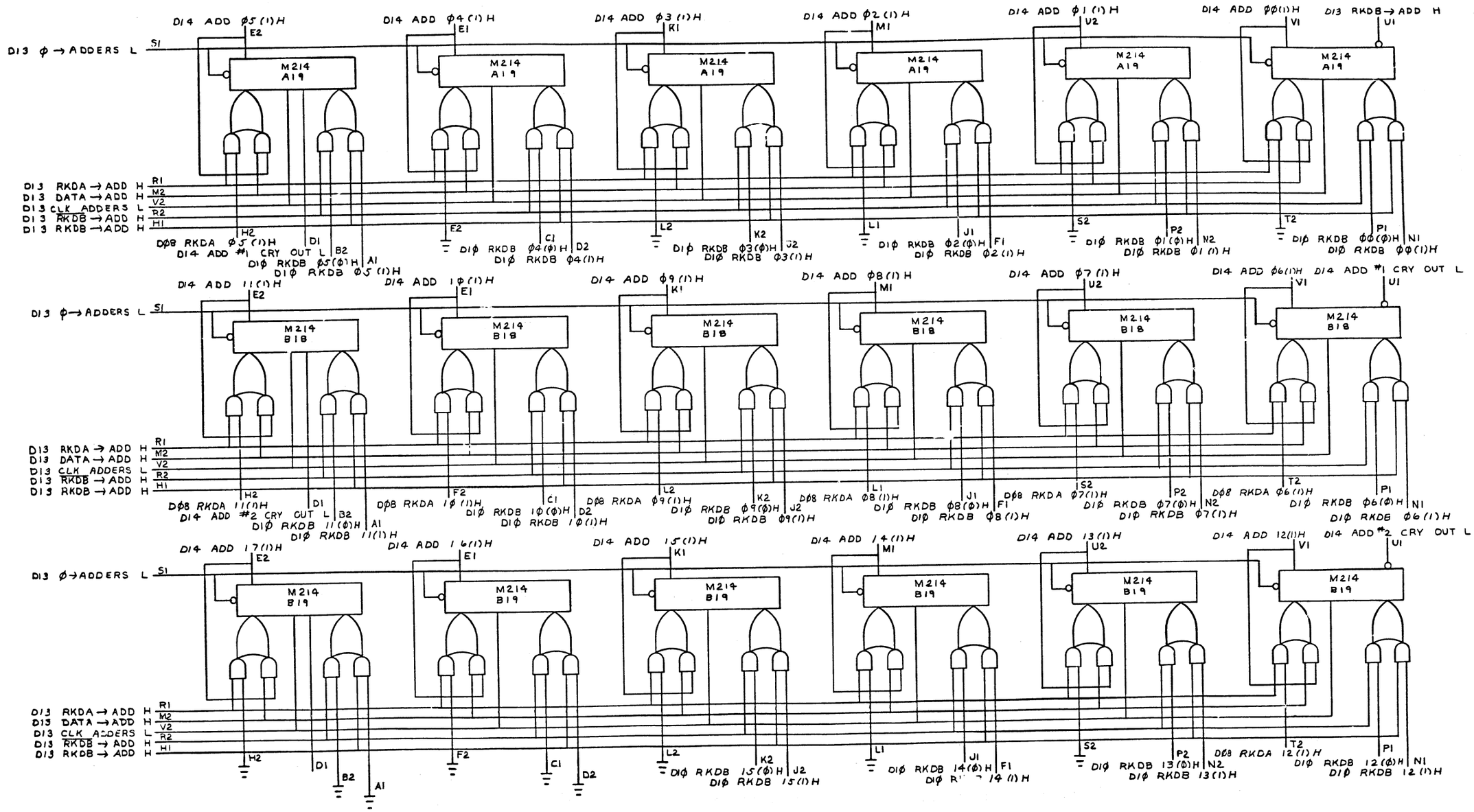

FIRST USED ON OPTION/MODEL	QTY.	DESCRIPTION	PART NO.	ITEM NO.
PDP-11		PARTS LIST		

UNLESS OTHERWISE SPECIFIED
UNLESS OTHERWISE SPECIFIED
DIMENSION IN INCHES
TOLERANCES
DECIMALS ± .005 FRACTIONS ± 1/64 ANGLES ± 0°30'
FINAL SURFACE QUALITY / REMOVE BURRS AND BREAK SHARP CORNERS

MATERIAL

FINISH

		DATE
DRN.		
CHK'D.		12-18-72
ENG		12-18-72
PROJ. ENG.		12-18-72
PROD.		12-18-72

NEXT HIGHER ASSY: A-ML-7606257-0

SCALE

SHEET 1 OF 1

digital EQUIPMENT CORPORATION MAYNARD MASSACHUSETTS

TITLE: ADDERS

SIZE D CODE BS NUMBER 7606257-0-14 REV.

DIST.

REVISIONS: REV. | CHANGE NO. | CHK

DEC FORM NO. DRD 102A

SIZE D CODE BS NUMBER 7606257-0-14 REV.

This drawing and specifications, herein, are the property of Digital Equipment Corporation and shall not be reproduced or copied or used in whole or in part as the basis for the manufacture or sale of items without written permission.

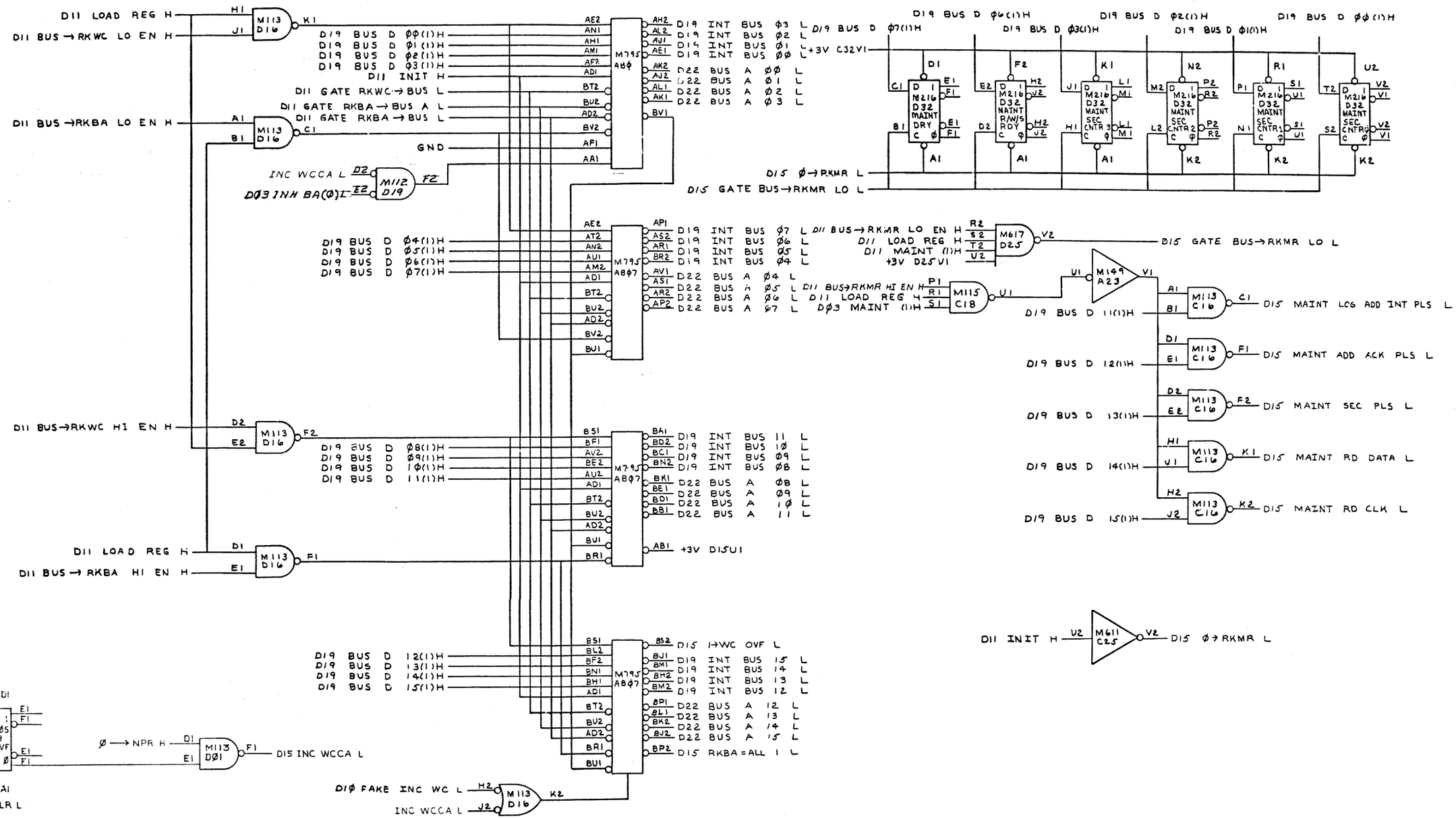

FIRST USED ON OPTION/MODEL	QTY.	DESCRIPTION	PART NO.	ITEM NO.
PDP-11		PARTS LIST		

UNLESS OTHERWISE SPECIFIED

UNLESS OTHERWISE SPECIFIED
DIMENSION IN INCHES
TOLERANCES
DEC'MALS ± .005 FRACTIONS ± 1/64 ANGLES ± 0°30'
FINAL SURFACE QUALITY
REMOVE BURRS AND BREAK SHARP CORNERS

MATERIAL

FINISH

DRN — DATE
CHK'D. — DATE 12-18-72
ENG. — DATE 12-18-72
PROJ. ENG. — DATE 12-18-72
PROD. — DATE 12-18-72

NEXT HIGHER ASSY
A-ML-76C6257-0

SCALE
SHEET 1 OF 1

digital EQUIPMENT CORPORATION
MAYNARD MASSACHUSETTS

TITLE
RKBA · RKWC · RKMR

SIZE D CODE BS NUMBER 76C6257-0-15 REV.

DIST.

REVISIONS
REV. | CHANGE NO. | CHK

DEC FORM NO. DRD 102A

This drawing and specifications, herein, are the property of Digital Equipment Corporation and shall not be reproduced or copied or used in whole or in part as the basis for the manufacture or sale of items without written permission.

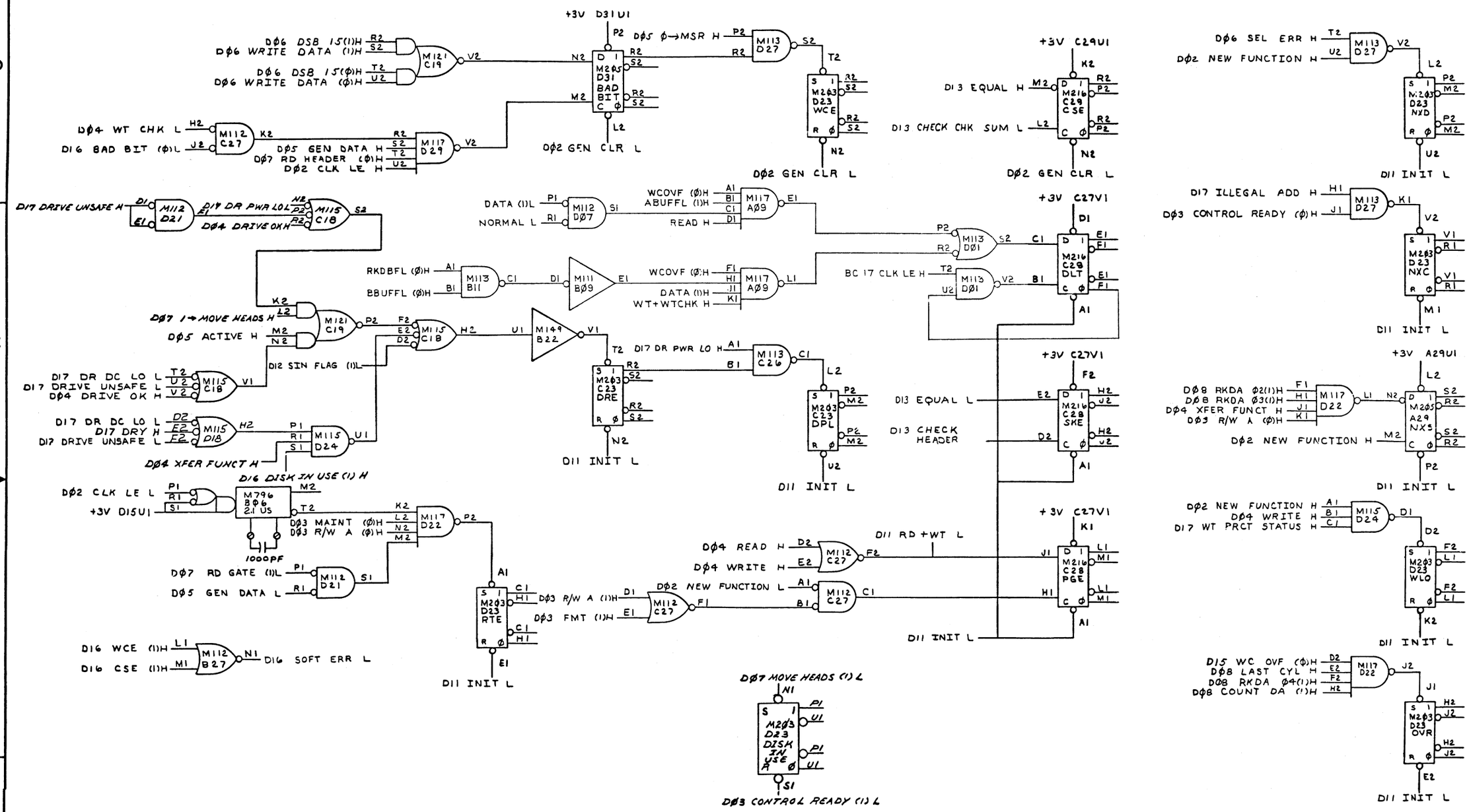

FIRST USED ON OPTION/MODEL	QTY.	DESCRIPTION	PART NO.	ITEM NO.
PDP-11		PARTS LIST		

UNLESS OTHERWISE SPECIFIED

UNLESS OTHERWISE SPECIFIED
DIMENSION IN INCHES
TOLERANCES
DECIMALS ± .005 FRACTIONS ± 1/64 ANGLES ± 0°30'
FINAL SURFACE QUALITY
REMOVE BURRS AND BREAK SHARP CORNERS

MATERIAL

FINISH

		DATE
DRN.		
CHK'D.		12-18-72
ENG.		12-18-72
PROJ. ENG.		12-18-72
PROD.		12-18-72

NEXT HIGHER ASSY: A-ML-7606257-0

SCALE

SHEET 1 OF 1

digital EQUIPMENT CORPORATION MAYNARD MASSACHUSETTS

TITLE: ERRORS

SIZE	CODE	NUMBER	REV.
D	BS	7606257-0-16	

DIST.

REVISIONS: REV. | CHANGE NO. | CHK

DEC FORM NO. DRD 102A

This drawing and specifications, herein, are the property of Digital Equipment Corporation and shall not be reproduced or copied or used in whole or in part as the basis for the manufacture or sale of items without written permission.

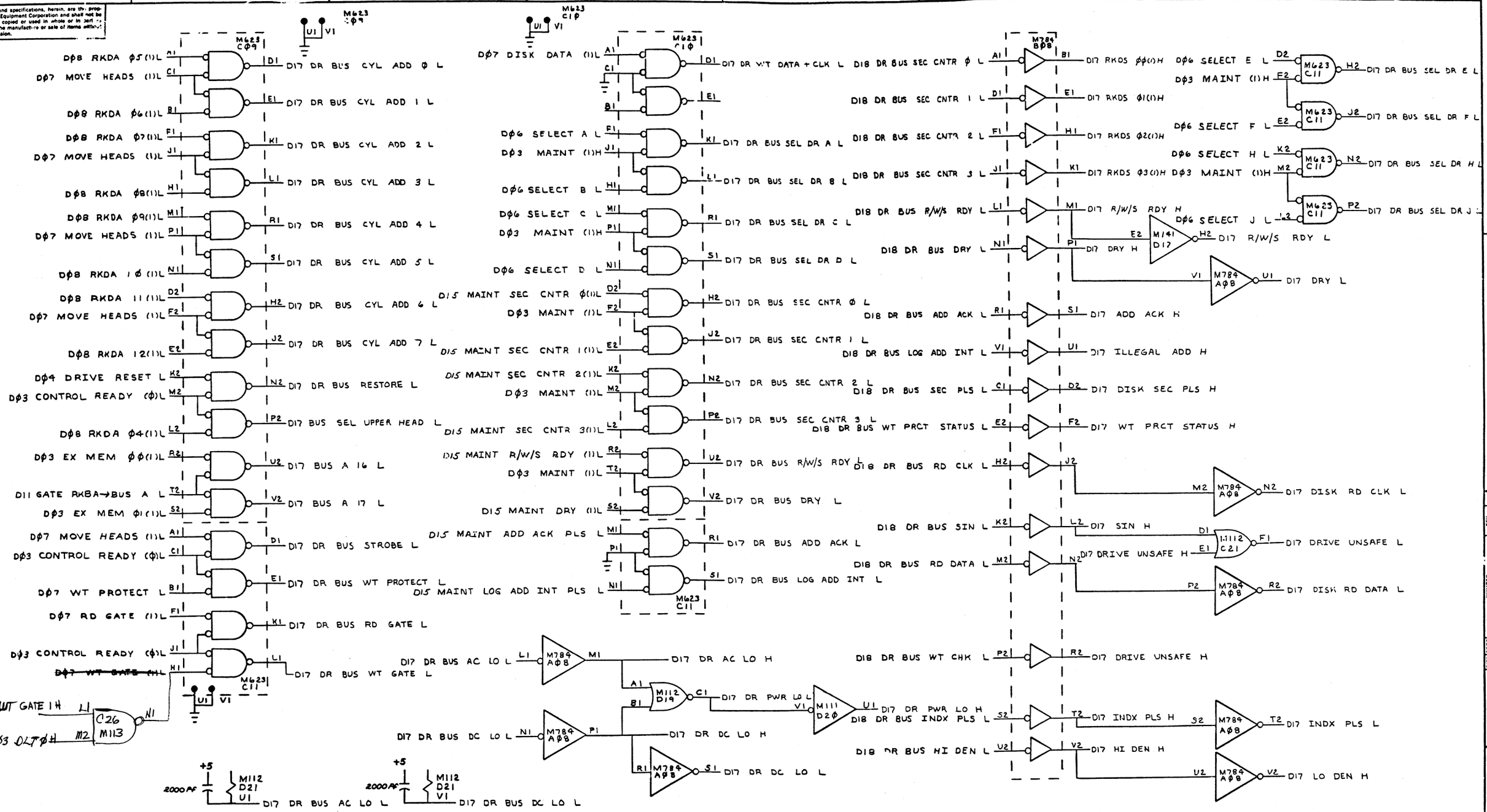

FIRST USED ON OPTION/MODEL	QTY.	DESCRIPTION	PART NO.	ITEM NO.
PDP-11		PARTS LIST		

UNLESS OTHERWISE SPECIFIED

UNLESS OTHERWISE SPECIFIED
DIMENSION IN INCHES
TOLERANCES
DECIMALS ± .005 FRACTIONS ± 1/64 ANGLES ± 0°30'
FINAL SURFACE QUALITY √
REMOVE BURRS AND BREAK SHARP CORNERS

MATERIAL

FINISH

DRN.		DATE
CHK'D.		DATE 12-18-72
ENG.		DATE 12-18-72
PROJ. ENG.		DATE 12-18-72
PROD.		DATE 12-18-72

NEXT HIGHER ASSY: A-ML-76C6257-0

SCALE

SHEET 1 OF 1

digital EQUIPMENT CORPORATION MAYNARD MASSACHUSETTS

TITLE: CABLE DRIVERS AND RECEIVERS

SIZE D CODE BS NUMBER 76C6257-0-17 REV.

DIST.

REVISIONS: REV. | CHANGE NO. | CHK

DEC FORM NO. DRD 102A

SIZE D CODE BS NUMBER 76C6257-0-17 REV.

This drawing and specifications, herein, are the property of Digital Equipment Corporation and shall not be reproduced or copied or used in whole or in part as the basis for the manufacture or sale of items without written permission.

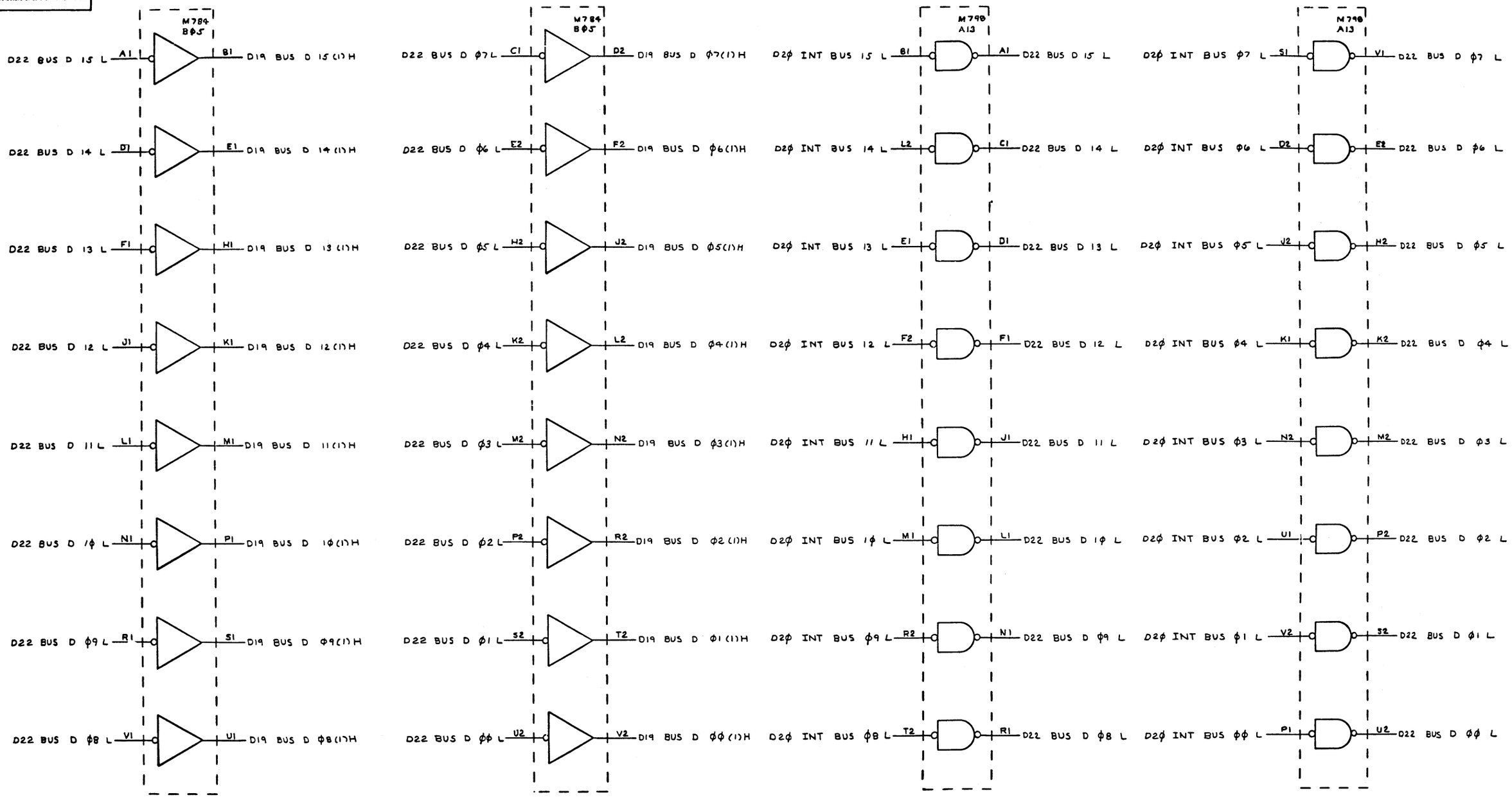

FIRST USED ON OPTION/MODEL	QTY.	DESCRIPTION	PART NO.	ITEM NO.
PDP-11		PARTS LIST		

UNLESS OTHERWISE SPECIFIED

UNLESS OTHERWISE SPECIFIED
DIMENSION IN INCHES
TOLERANCES
DECIMALS ± .005 FRACTIONS ± 1/64 ANGLES ± 0°30'
FINAL SURFACE QUALITY
REMOVE BURRS AND BREAK SHARP CORNERS

MATERIAL —/—

FINISH —/—

		DATE
DRN.	[illegible]	12-4-72
CHK'D.	[illegible]	12-5-72
ENG.	[illegible]	12-18-72
PROJ. ENG.	[illegible]	12-18-72
PROD.	[illegible]	12-18-72

NEXT HIGHER ASSY A-ML-76C6257-0

SCALE —/—

SHEET 1 OF 1

digital EQUIPMENT CORPORATION MAYNARD, MASSACHUSETTS

TITLE BUS "D" RCVRS AND DRVRS

SIZE	CODE	NUMBER	REV.
D	BS	76C6257-0-8	

DIST.

REVISIONS: REV. | CHANGE NO. | CHK

DEC FORM NO. DRD 102A

This drawing and specifications, herein, are the property of Digital Equipment Corporation and shall not be reproduced or copied or used in whole or in part as the basis for the manufacture or sale of items without written permission.

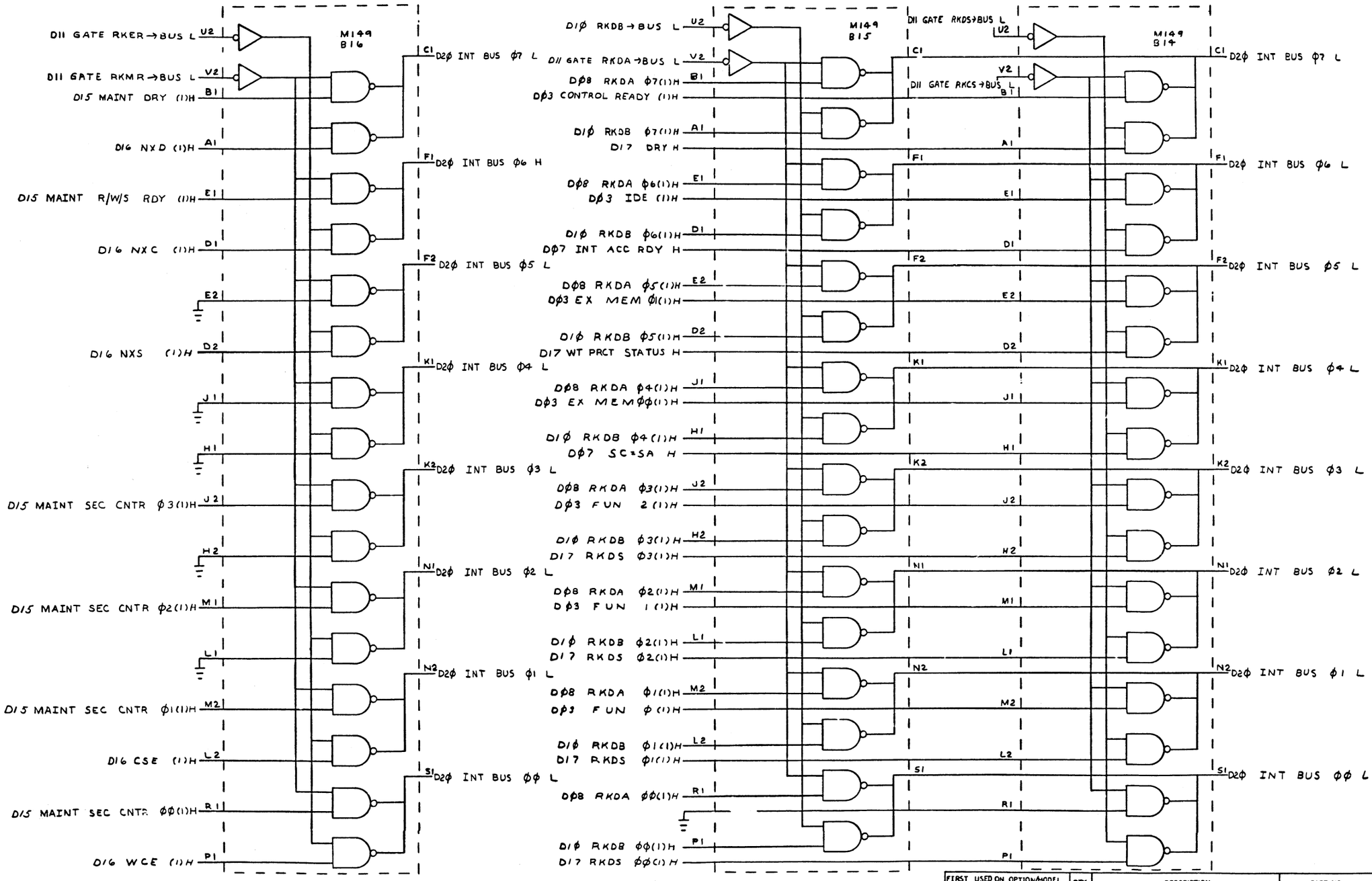

FIRST USED ON OPTION/MODEL	QTY.	DESCRIPTION	PART NO.	ITEM NO.
PDP-11		PARTS LIST		

UNLESS OTHERWISE SPECIFIED

UNLESS OTHERWISE SPECIFIED
DIMENSION IN INCHES
TOLERANCES
DECIMALS ± .005 FRACTIONS ± 1/64 ANGLES ± 0°30'
FINAL SURFACE QUALITY ✓
REMOVE BURRS AND BREAK SHARP CORNERS

MATERIAL

FINISH

		DATE
DRN.		
CHK'D.		12-18-72
ENG.		12-18-72
PROJ. ENG.		12-18-72
PROD.		12-18-72

NEXT HIGHER ASSY
A-ML-7606257-0

SCALE

SHEET 1 OF 2

digital EQUIPMENT CORPORATION
MAYNARD, MASSACHUSETTS

TITLE
INTERNAL BUS
(ØØ→ 15)

SIZE	CODE	NUMBER	REV
D	BS	7606257-C-19	

DIST.

REVISIONS: REV. | CHANGE NO. | CHK

DEC FORM NO. DRD 102A

This drawing and specifications, herein, are the property of Digital Equipment Corporation and shall not be reproduced or copied or used in whole or in part as the basis for the manufacture or sale of items without written permission.

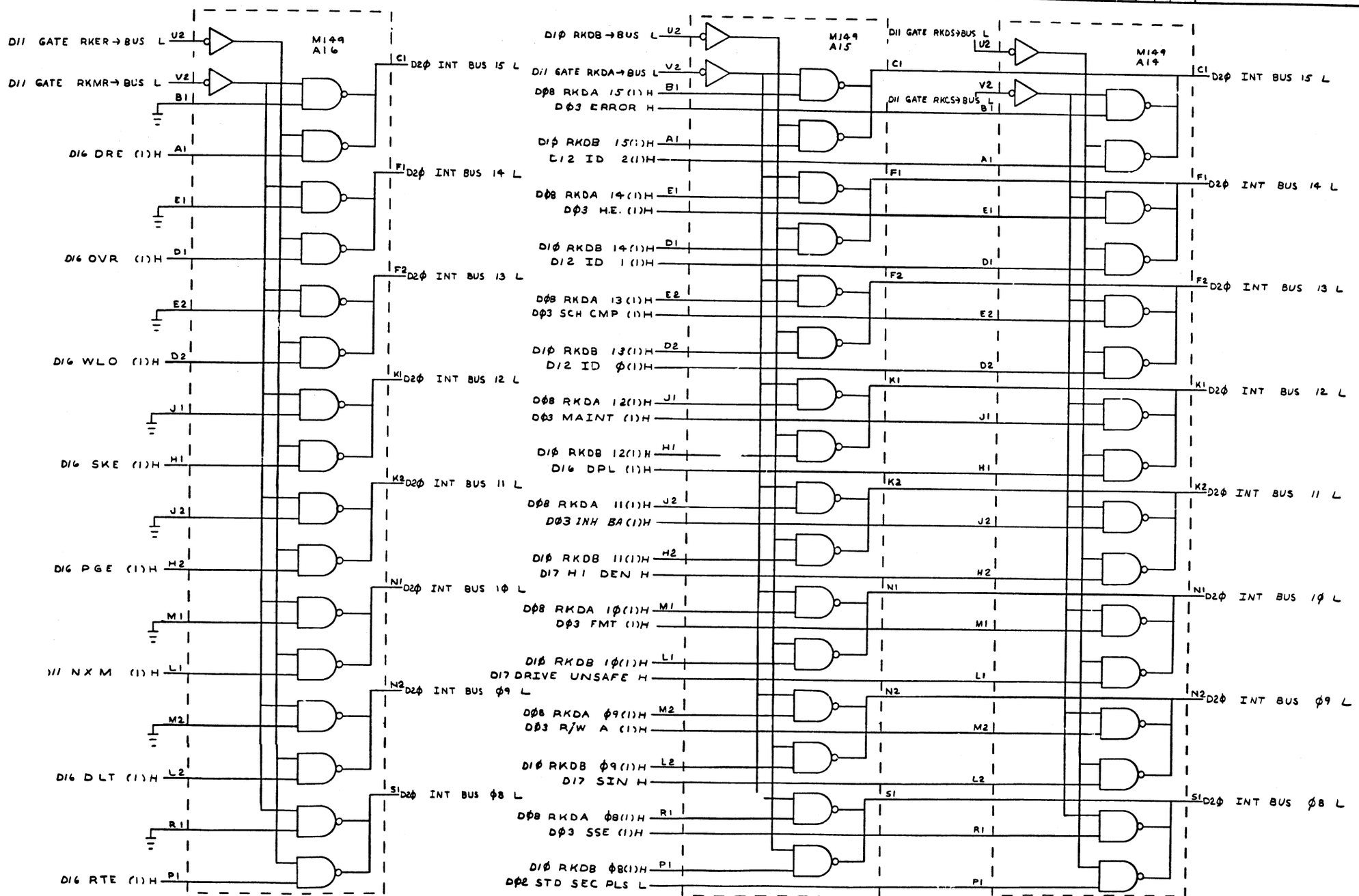

FIRST USED ON OPTION/MODEL	QTY.	DESCRIPTION	PART NO.	ITEM NO.
PDP-11		PARTS LIST		

UNLESS OTHERWISE SPECIFIED

UNLESS OTHERWISE SPECIFIED
DIMENSION IN INCHES
TOLERANCES
DECIMALS ± .005 FRACTIONS ± 1/64 ANGLES ± 0°30'
FINAL SURFACE QUALITY √
REMOVE BURRS AND BREAK SHARP CORNERS

MATERIAL

FINISH

DRN.	DATE 6-6-72	
CHK'D.	DATE 8-8-72	
ENG.	DATE 12-18-72	
PROJ. ENG.	DATE 12-18-72	
PROD.	DATE 12-18-72	
NEXT HIGHER ASSY A-ML-7606257-0		
SCALE		
SHEET 2 OF 2		

digital EQUIPMENT CORPORATION MAYNARD, MASSACHUSETTS

TITLE INTERNAL BUS ØØ - 15

SIZE D CODE BS NUMBER 7606257-0-19 REV.

DIST.

REVISIONS: REV. | CHANGE NO. | CHK

DEC FORM NO. DRD 102A

This drawing and specifications, herein, are the property of Digital Equipment Corporation and shall not be reproduced or copied or used in whole or in part as the basis for the manufacture or sale of items, without written permission.

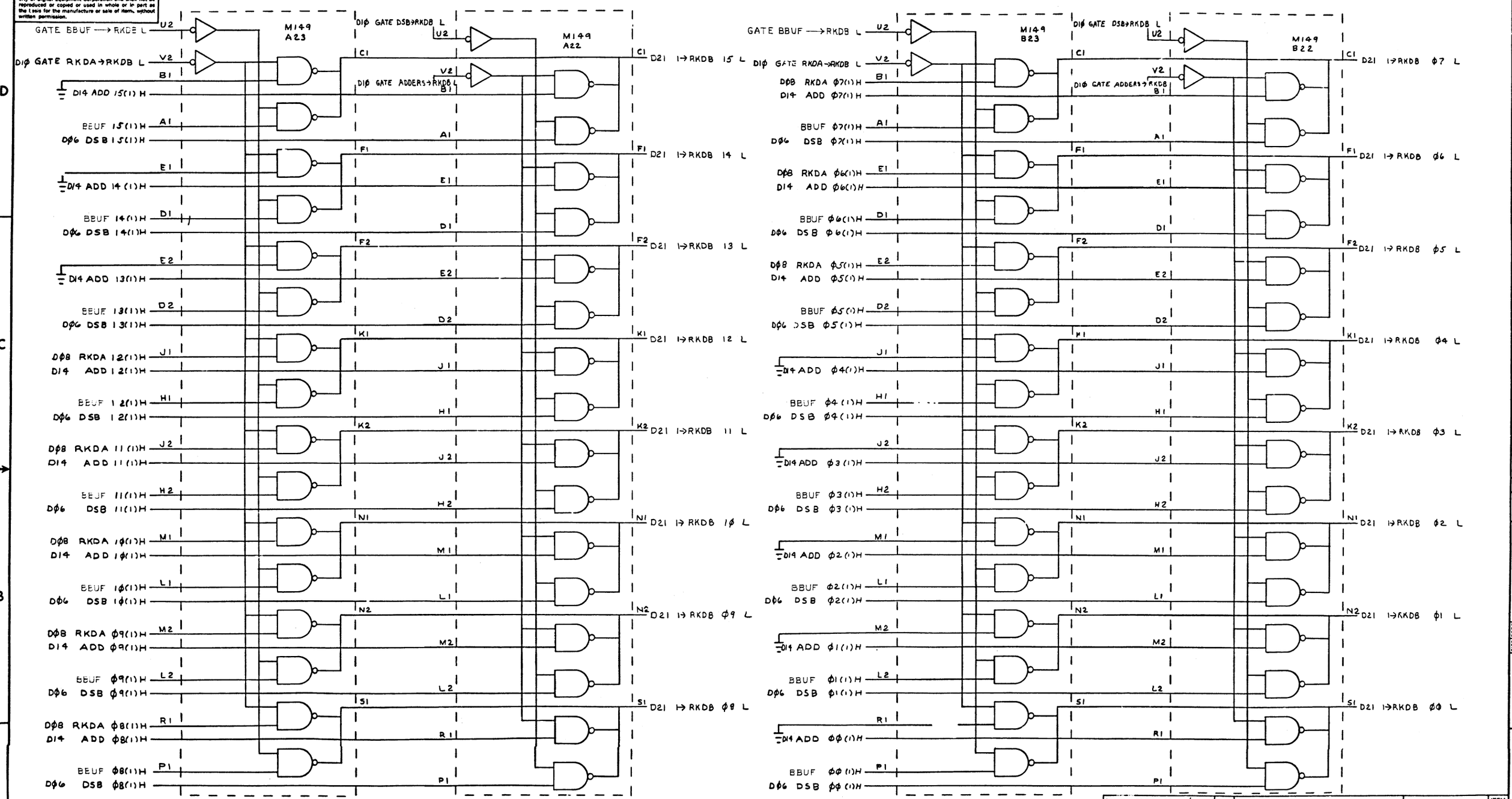

FIRST USED ON OPTION MODEL	QTY.	DESCRIPTION	PART NO.	ITEM NO.
PDP-11		PARTS LIST		

UNLESS OTHERWISE SPECIFIED

UNLESS OTHERWISE SPECIFIED
DIMENSION IN INCHES
TOLERANCES
DECIMALS ± .005 FRACTIONS ± 1/64 ANGLES ± 0°30'
FINAL SURFACE QUALITY
REMOVE BURRS AND BREAK SHARP CORNERS

MATERIAL

FINISH

		DATE
DRN.		
CHK'D.		12-15-72
ENG.		12-15-72
PROJ. ENG.		12-15-72
PROD.		12-15-72

NEXT HIGHER ASSY: A-ML-7606257-0

SCALE

SHEET 1 OF 1

digital EQUIPMENT CORPORATION MAYNARD MASSACHUSETTS

TITLE: RKDB DATA PATHS

SIZE D CODE BS NUMBER 7606257-0-20 REV.

DIST.

REVISIONS: REV. | CHANGE NO. | CHK

DEC FORM NO. DRD 102A

This drawing and specifications, herein, are the property of Digital Equipment Corporation and shall not be reproduced or copied or used in whole or in part as the basis for the manufacture or sale of items without written permission.

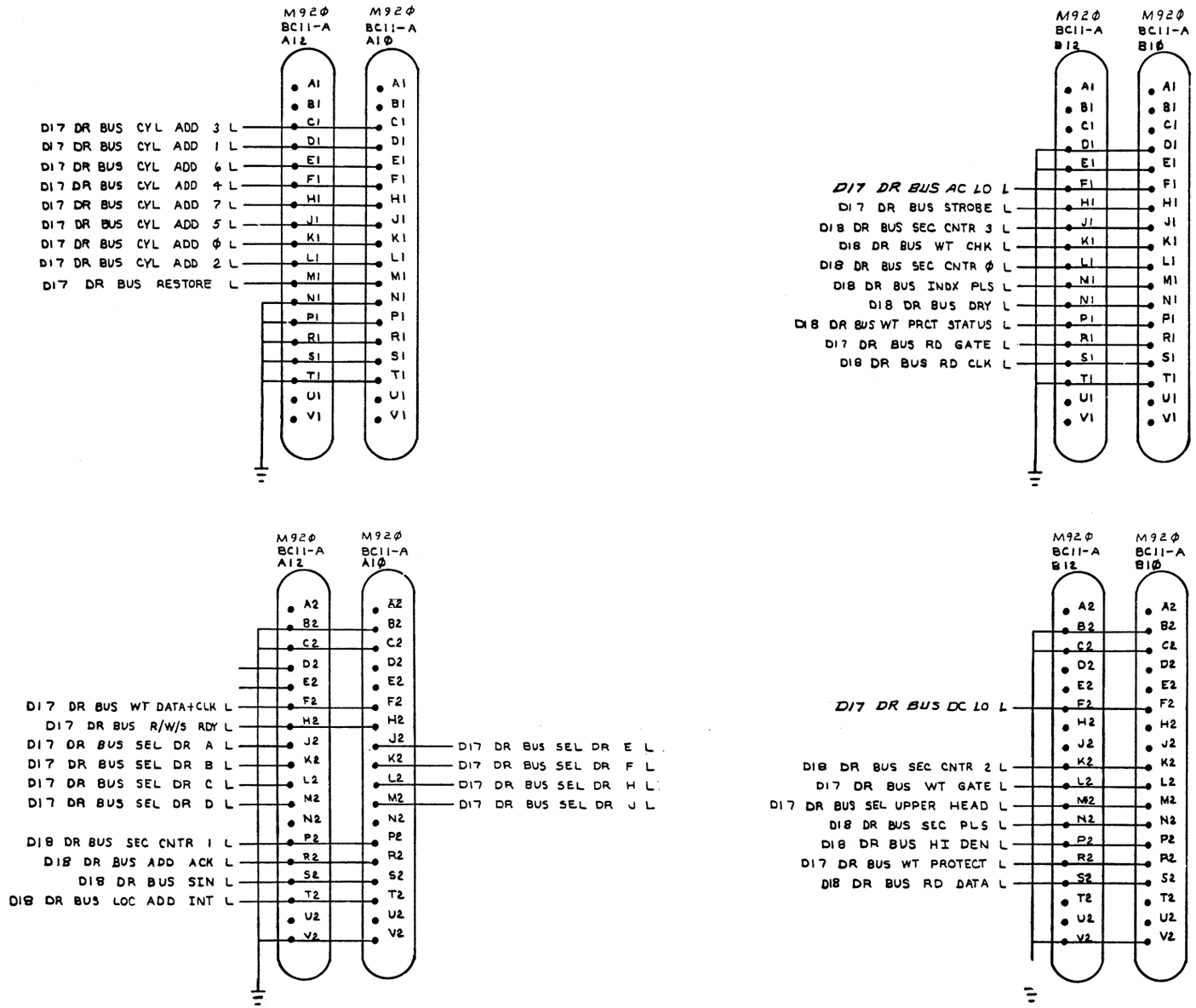

NOTE:
BC11-A
IS A DOUBLE HEIGHT
MODULE.

FIRST USED ON OPTION	MODEL	QTY.	DESCRIPTION	PART NO.	ITEM NO.
	PDP-11		PARTS LIST		

UNLESS OTHERWISE SPECIFIED
UNLESS OTHERWISE SPECIFIED
DIMENSION IN INCHES
TOLERANCES
DECIMALS ± .005 FRACTIONS ± 1/64 ANGLES ± 0°30'
FINAL SURFACE QUALITY
REMOVE BURRS AND BREAK SHARP CORNERS

MATERIAL
FINISH

DRN. R.E.G. LENNCH DATE 12-18-72
CHK'D DATE 12-18-72
ENG. DATE 12-18-72
PROJ. ENG. DATE 12-18-72
PROD. DATE 12-18-72
NEXT HIGHER ASSY A-ML-760625?-0
SCALE
SHEET 1 OF 1

digital EQUIPMENT CORPORATION MAYNARD MASSACHUSETTS

TITLE DISK CABLE AND TERMINATION

SIZE D CODE IC NUMBER 7606257-0-21 REV.
DIST.

REVISIONS REV. CHANGE NO. CHK

DEC FORM NO DRD 102A

This drawing and specifications, herein, are the property of Digital Equipment Corporation and shall not be reproduced or copied or used in whole or in part as the basis for the manufacture or sale of items without written permission.

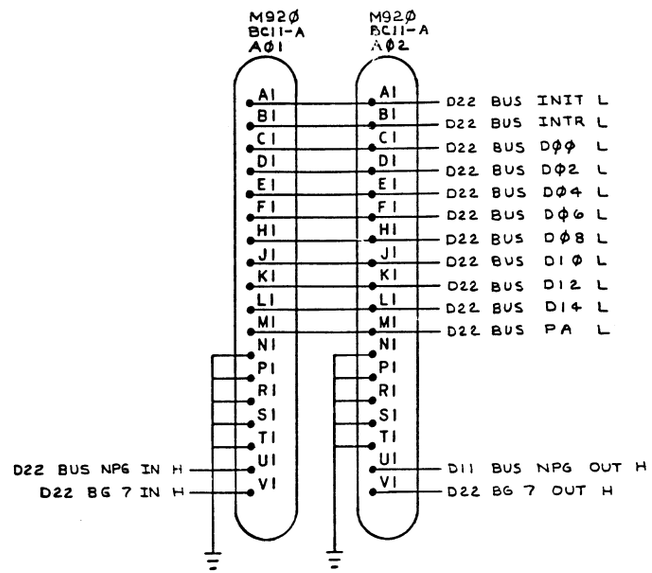

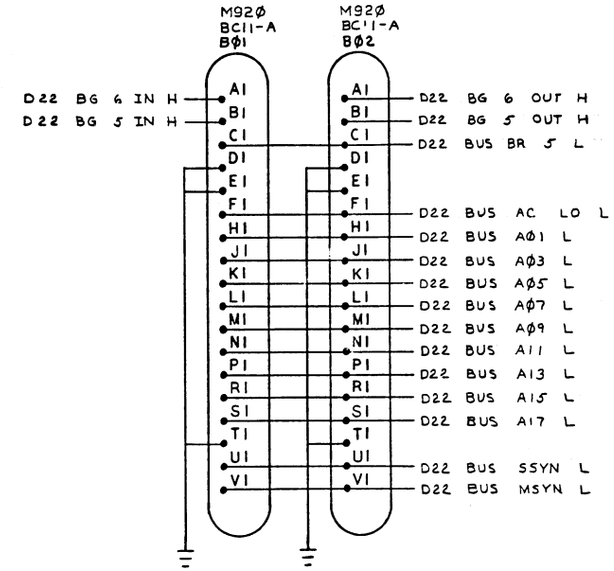

NOTES:
THE UNIBUS CONNECTOR IS A DOUBLE HEIGHT MODULE.

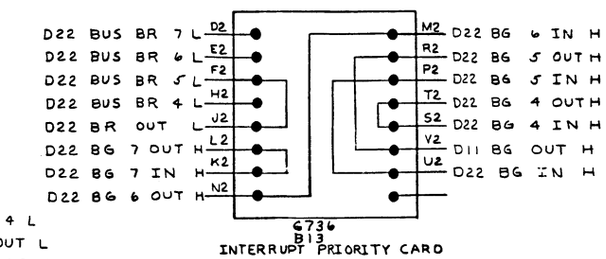

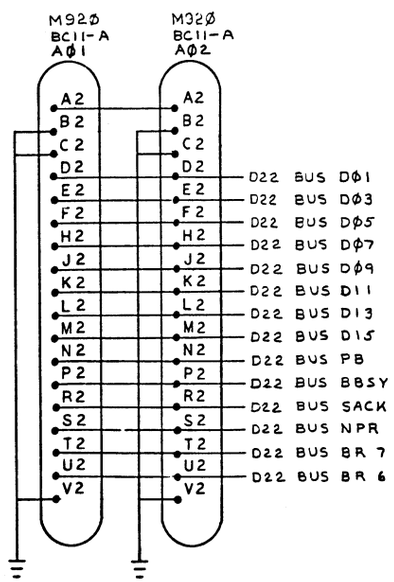

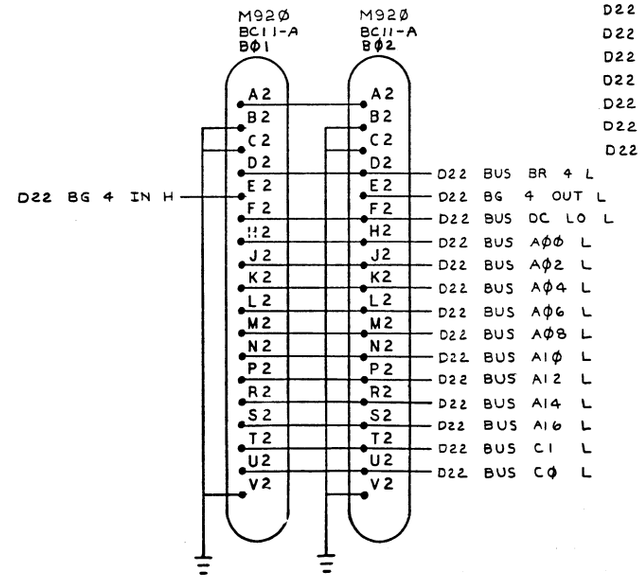

FIRST USED ON OPTION/MODEL	QTY.	DESCRIPTION	PART NO.	ITEM NO.
PDP-11		PARTS LIST		

UNLESS OTHERWISE SPECIFIED

UNLESS OTHERWISE SPECIFIED
DIMENSION IN INCHES
TOLERANCES
DECIMALS ± .005 FRACTIONS ± 1/64 ANGLES ± 0°30'
FINAL SURFACE QUALITY
REMOVE BURRS AND BREAK SHARP CORNERS

MATERIAL

FINISH

DRN.		DATE
CHK'D.		DATE 12-18-72
ENG.		DATE 12-18-72
PROJ. ENG.		DATE 12-18-72
PROD.		DATE 12-18-72

NEXT HIGHER ASSY
A-ML-7606257-0

SCALE

SHEET 1 OF 1

digital EQUIPMENT CORPORATION
MAYNARD MASSACHUSETTS

TITLE
UNIBUS CONNECTORS

SIZE	CODE	NUMBER	REV.
D	IC	7606257-0-22	

DIST.

REVISIONS
CHANGE NO. | REV.

SIZE D CODE IC NUMBER 7606257-0-22 REV.

This drawing and specifications, herein, are the property of Digital Equipment Corporation and shall not be reproduced or copied or used in whole or in part as the basis for the manufacture or sale of items without written permission.

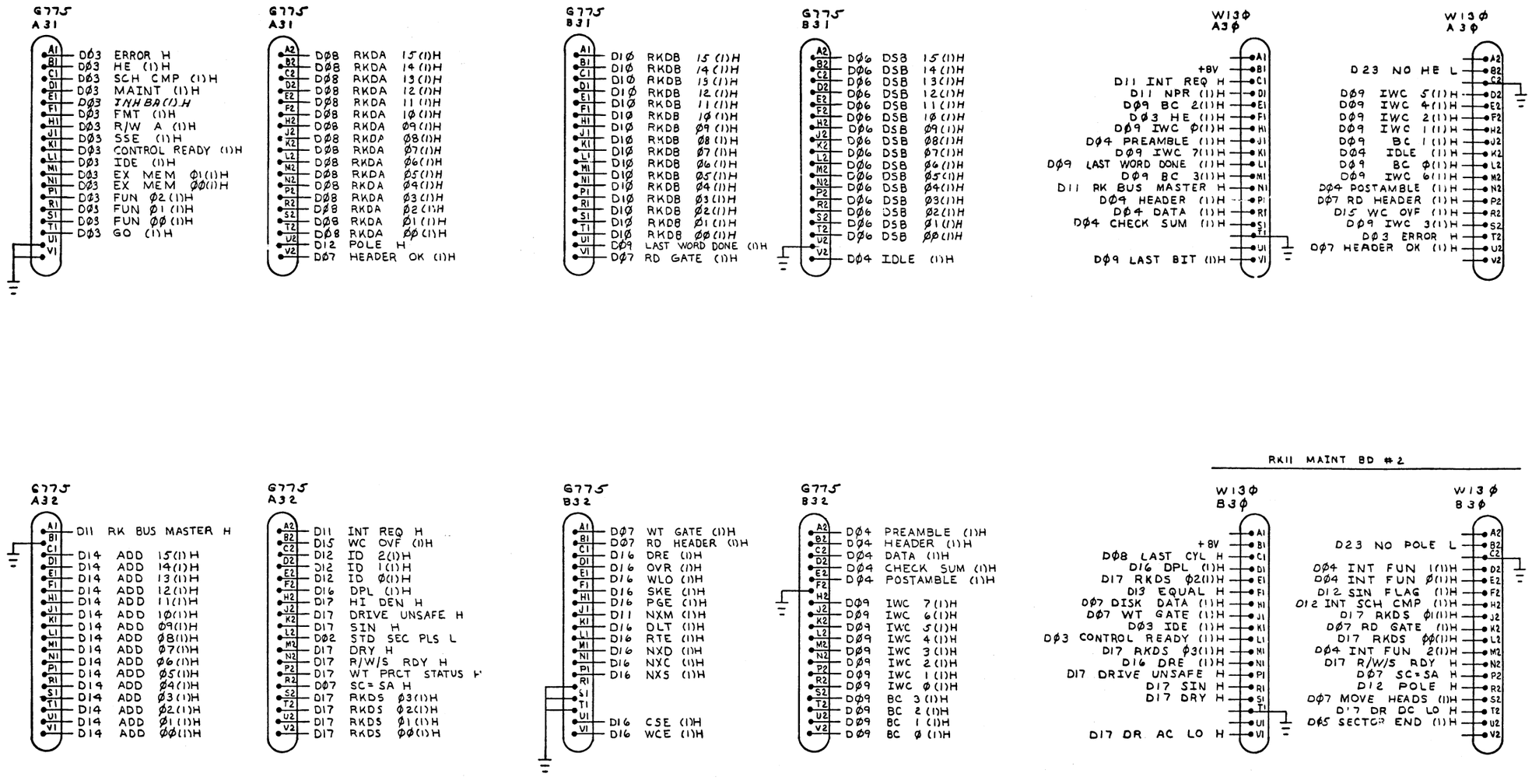

FIRST USED ON OPTION/MODEL	QTY.	DESCRIPTION	PART NO.	ITEM NO.
PDP-11		PARTS LIST		

UNLESS OTHERWISE SPECIFIED

UNLESS OTHERWISE SPECIFIED
DIMENSION IN INCHES
TOLERANCES
DECIMALS ± .005 FRACTIONS ± 1/64 ANGLES ± 0°30'
FINAL SURFACE QUALITY ✓
REMOVE BURRS AND BREAK SHARP CORNERS

MATERIAL —/—

FINISH —/—

		DATE
DRN.		
CHK'D.		12-1-72
ENG.		12-1-72
PROJ. ENG.		12-1-72
PROD.		12-1-72

NEXT HIGHER ASSY: A-ML-7606257-0

SCALE —/—

SHEET 1 OF 1

digital EQUIPMENT CORPORATION MAYNARD MASSACHUSETTS

TITLE: RK11-C INDICATOR CONNECTIONS

SIZE	CODE	NUMBER	REV.
D	IC	7606257-0-23	

DIST.

REVISIONS: REV. | CHANGE NO. | CHK

DEC FORM NO. DRD 102A

This drawing and specifications, herein, are the property of Digital Equipment Corporation and shall not be reproduced or copied or used in whole or in part as the basis for the manufacture or sale of items without written permission.

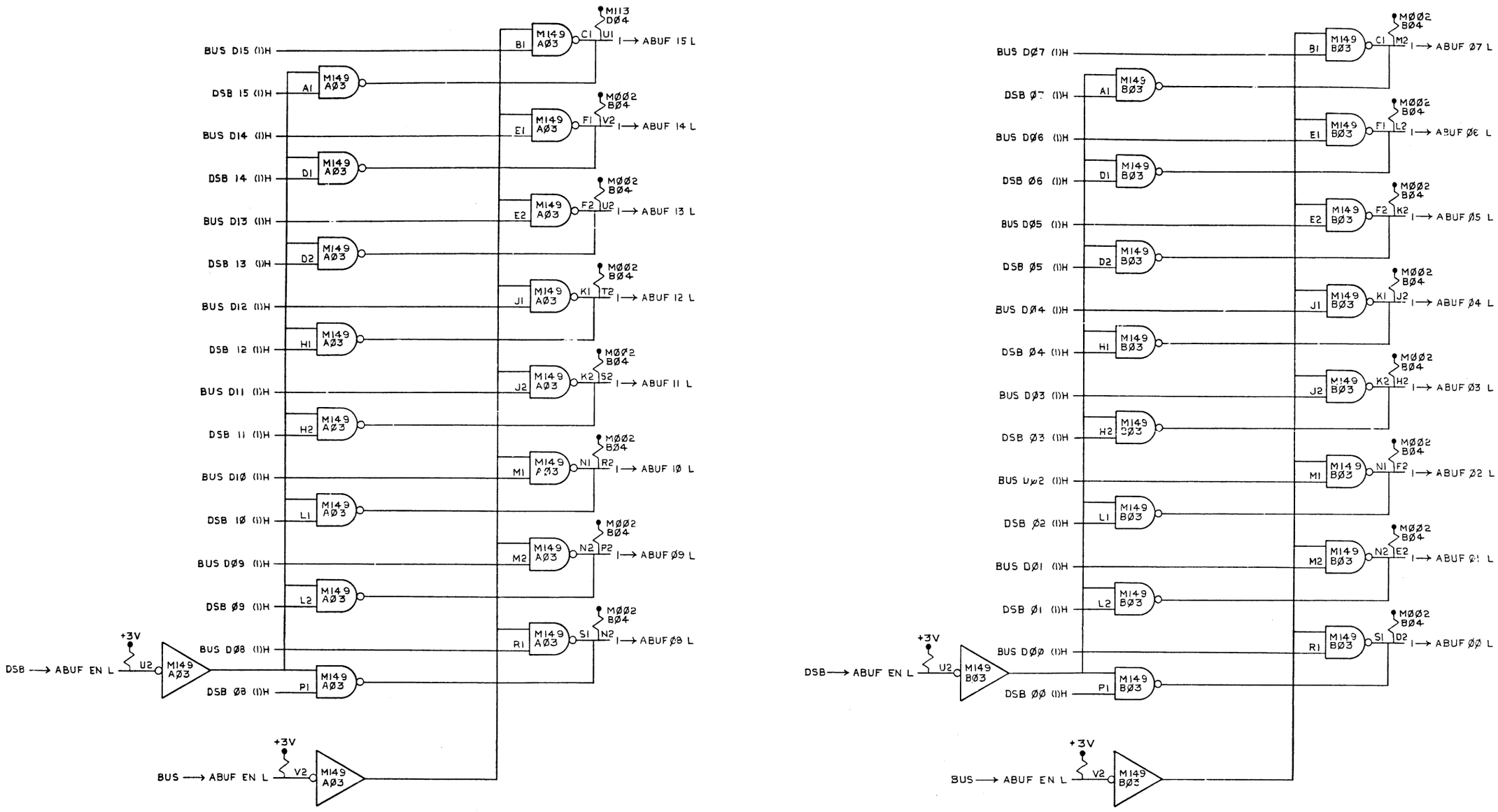

FIRST USED ON OPTION/MODEL	QTY.	DESCRIPTION	PART NO.	ITEM NO.
PDP-11		PARTS LIST		

UNLESS OTHERWISE SPECIFIED DIMENSION IN INCHES. TOLERANCES

DECIMALS	ANGLES
.XXX = .005 .XX = .02 .X = .1	±0° 30'

REMOVE BURRS AND BREAK SHARP CORNERS SURFACE QUALITY ✓

MATERIAL —/—

FINISH —/—

		DATE
DRN.	[illegible]	[illegible]
CHK'D	[illegible]	[illegible]
ENG.	[illegible]	[illegible]
PROJ. ENG.	[illegible]	[illegible]
PROD.	[illegible]	[illegible]

NEXT HIGHER ASSY. A-ML-7606257-0

SCALE NONE

SHEET 1 OF 1

digital EQUIPMENT CORPORATION MAYNARD MASSACHUSETTS

TITLE DSB/BUS→ABUF CONTROLS (DISK CONTROL) RK11-C

SIZE	CODE	NUMBER	REV.
D	BS	7606257-0-24	

DIST.

REV	CHANGE NO.	CHK
	REVISIONS	

BRUNING 40-522 15M40

DEC FORM NO DRD 102-B

SIZE D CODE BS NUMBER 7606257-0-24 REV

This drawing and specifications, herein, are the property of Digital Equipment Corporation and shall not be reproduced or copied or used in whole or in part as the basis for the manufacture or sale of items without written permission.

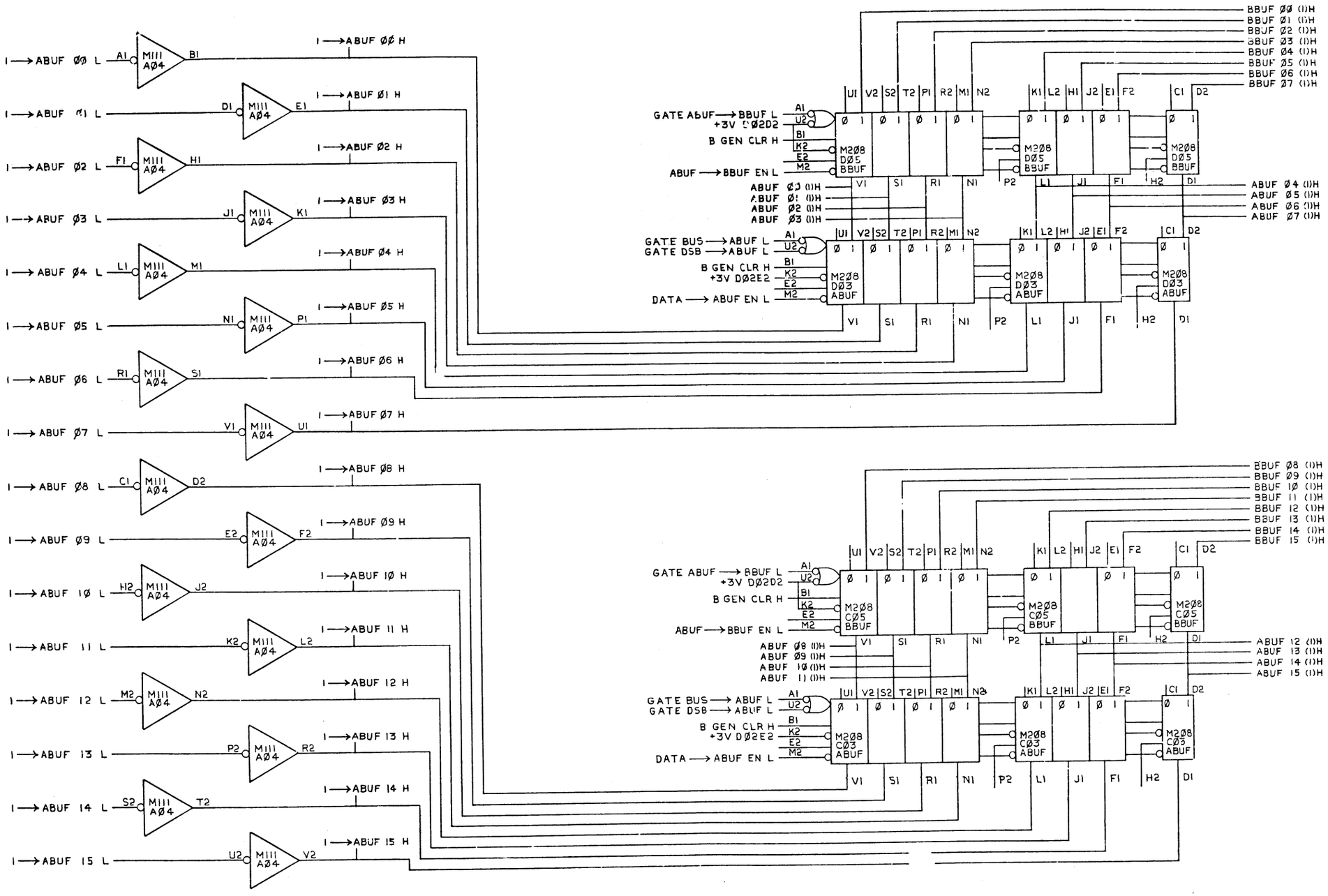

MAR 9 1973
ISSUED

FIRST USED ON OPTION/MODEL	QTY.	DESCRIPTION	PART NO.	ITEM NO.
PDP-11		PARTS LIST		

UNLESS OTHERWISE SPECIFIED DIMENSION IN INCHES. TOLERANCES

DECIMALS	ANGLES
.XXX = .005	±0° 30'
.XX = .02	
.X = .1	

REMOVE BURRS AND BREAK SHARP CORNERS SURFACE QUALITY ✓

MATERIAL

FINISH

DRN. DATE 7-5-72
CHK'D. DATE
ENG. DATE 12-18-72
PROJ. ENG. DATE 12-18-72
PROD. DATE 12-18-72

digital EQUIPMENT CORPORATION MAYNARD MASSACHUSETTS

TITLE A BUF • BBUF REG. (DISK CONTROL) RK11-C

NEXT HIGHER ASSY. A-ML-7606257-0

SCALE NONE

SHEET 1 OF 1

SIZE	CODE	NUMBER	REV.
D	BS	7606257-0-25	

DIST.

REVISIONS: REV | CHANGE NO. | CHK

BRUNING 40-522 15840

JEC FORM NO DRD 102-B

This drawing and specifications, herein, are the property of Digital Equipment Corporation and shall not be reproduced or copied or used in whole or in part as the basis for the manufacture or sale of items without written permission.

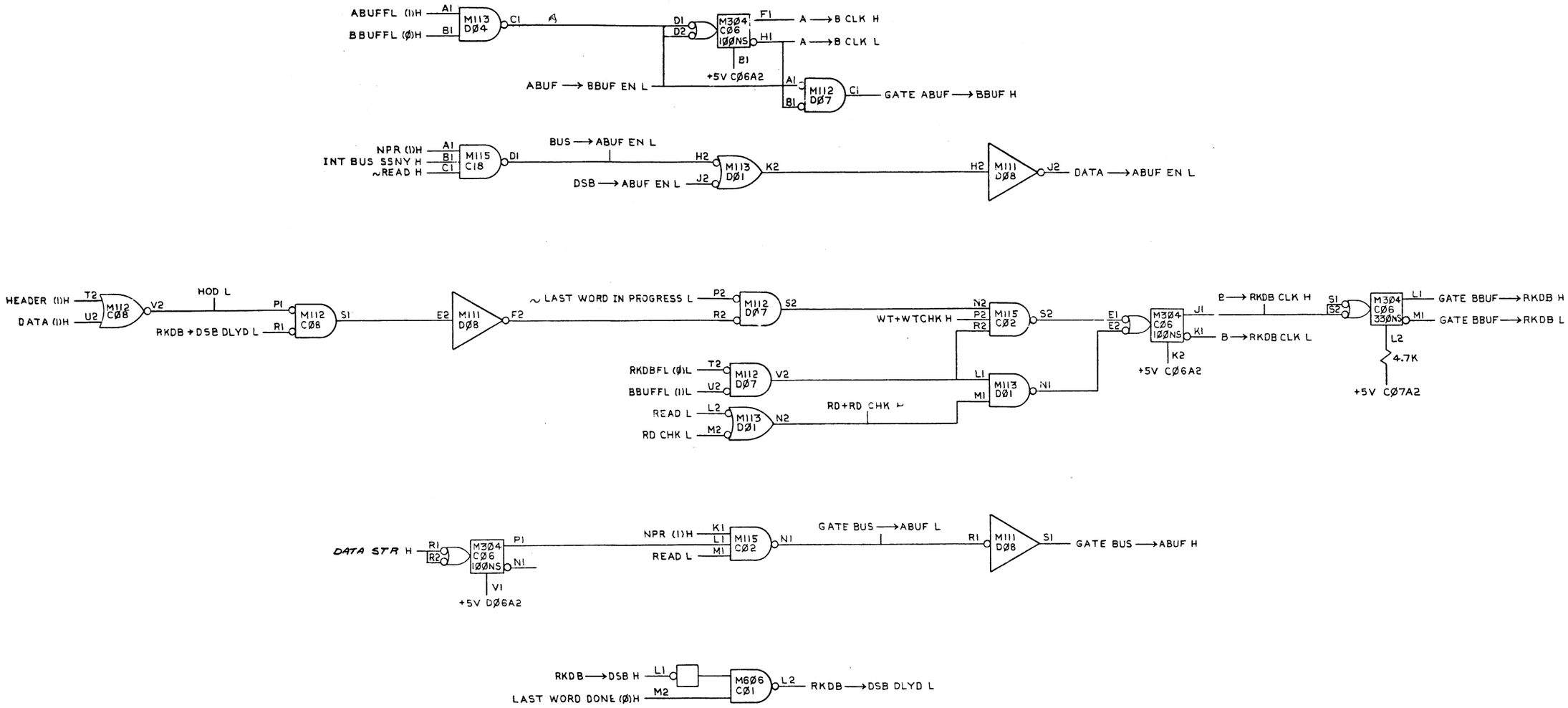

FIRST USED ON OPTION/MODEL	QTY.	DESCRIPTION	PART NO.	ITEM NO.
PDP-11		PARTS LIST		

UNLESS OTHERWISE SPECIFIED DIMENSION IN INCHES. TOLERANCES

DECIMALS	ANGLES
.XXX = .005 .XX = .02 .X = .1	±0° 30'

REMOVE BURRS AND BREAK SHARP CORNERS SURFACE QUALITY ✓

MATERIAL —/——/—

FINISH —/——/—

		DATE
DRN.		1/6/72
CHK'D		12-18-72
ENG.		12-18-72
PROJ. ENG.		12-18-72
PROD.		12-18-72

NEXT HIGHER ASSY. A-ML-7606257-0

SCALE NONE

SHEET 1 OF 1

digital EQUIPMENT CORPORATION MAYNARD MASSACHUSETTS

TITLE INTERBUFFER TRANSFER CONTROL

SIZE	CODE	NUMBER	REV.
D	BS	7606257-0-26	

DIST.

REVISIONS: REV. | CHANGE NO. | CHK

DEC FORM NO DRD 100-A

SIZE D CODE BS NUMBER 7606257-0-26 REV.

This drawing and specifications, herein, are the property of Digital Equipment Corporation and shall not be reproduced or copied or used in whole or in part as the basis for the manufacture or sale of items without written permission.

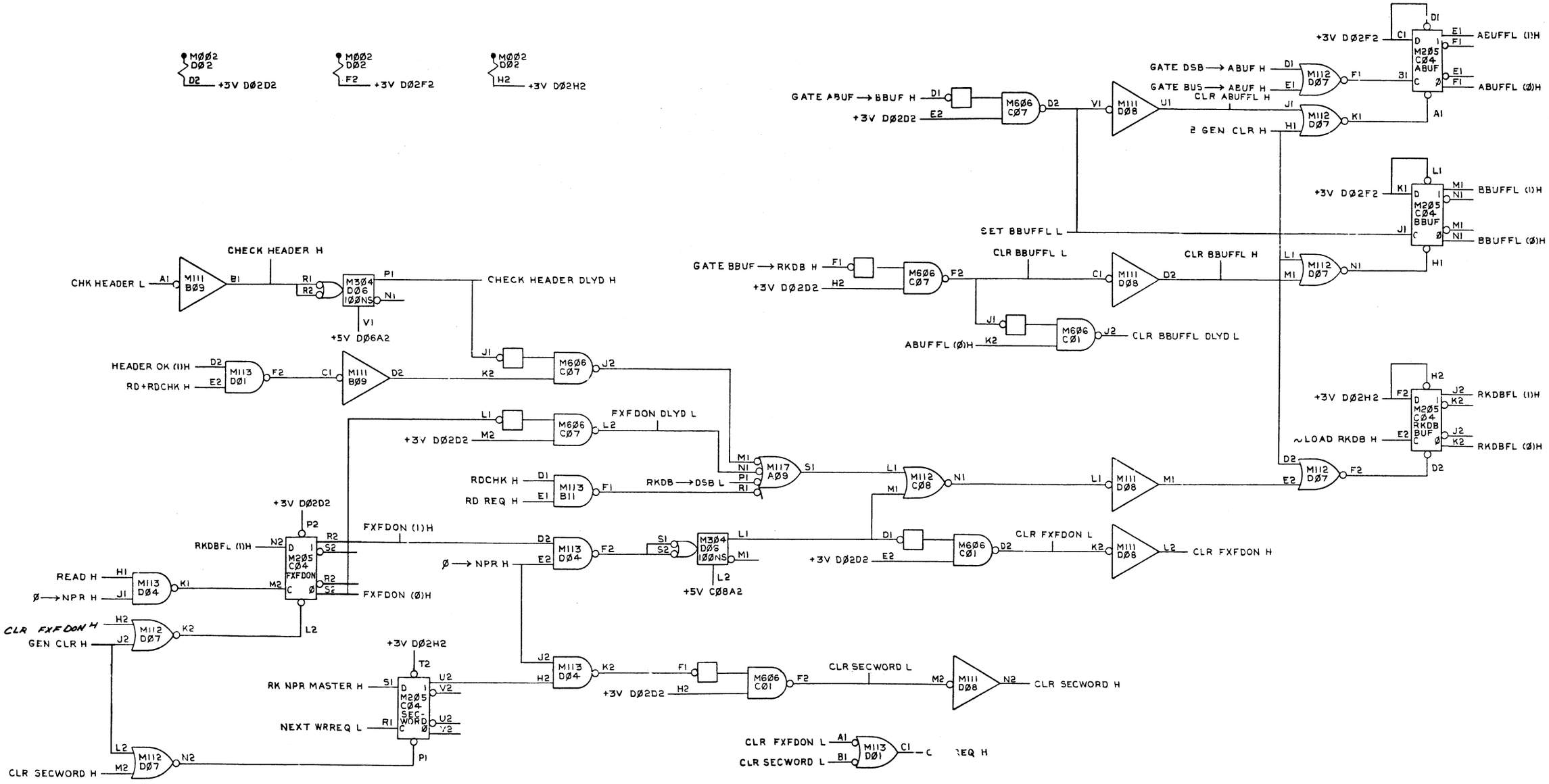

FIRST USED ON OPTION/MODEL	QTY.	DESCRIPTION	PART NO.	ITEM NO.
PDP-11		PARTS LIST		

UNLESS OTHERWISE SPECIFIED DIMENSION IN INCHES. TOLERANCES

DECIMALS	ANGLES
.XXX = .005 .XX = .02 .X = .1	±0° 30'

REMOVE BURRS AND BREAK SHARP CORNERS SURFACE QUALITY ✓

MATERIAL —

FINISH —

		DATE
DRN.		5-7-72
CHK'D		12-17-72
ENG.		12-17-72
PROJ. ENG.		12-17-72
PROD.		12-17-72

NEXT HIGHER ASSY. A-MI-7606257-0

SCALE NONE

SHEET 1 OF 1

digital EQUIPMENT CORPORATION MAYNARD MASSACHUSETTS

TITLE BUFFER CONTROL

SIZE	CODE	NUMBER	REV.
D	BS	7606257-0-27	

DIST.

REVISIONS: REV. | CHANGE NO. | CHK

DEC FORM NO. DRD 100-A

This drawing and specifications, herein, are the property of Digital Equipment Corporation and shall not be reproduced or copied or used in whole or in part as the basis for the manufacture or sale of items without written permission.

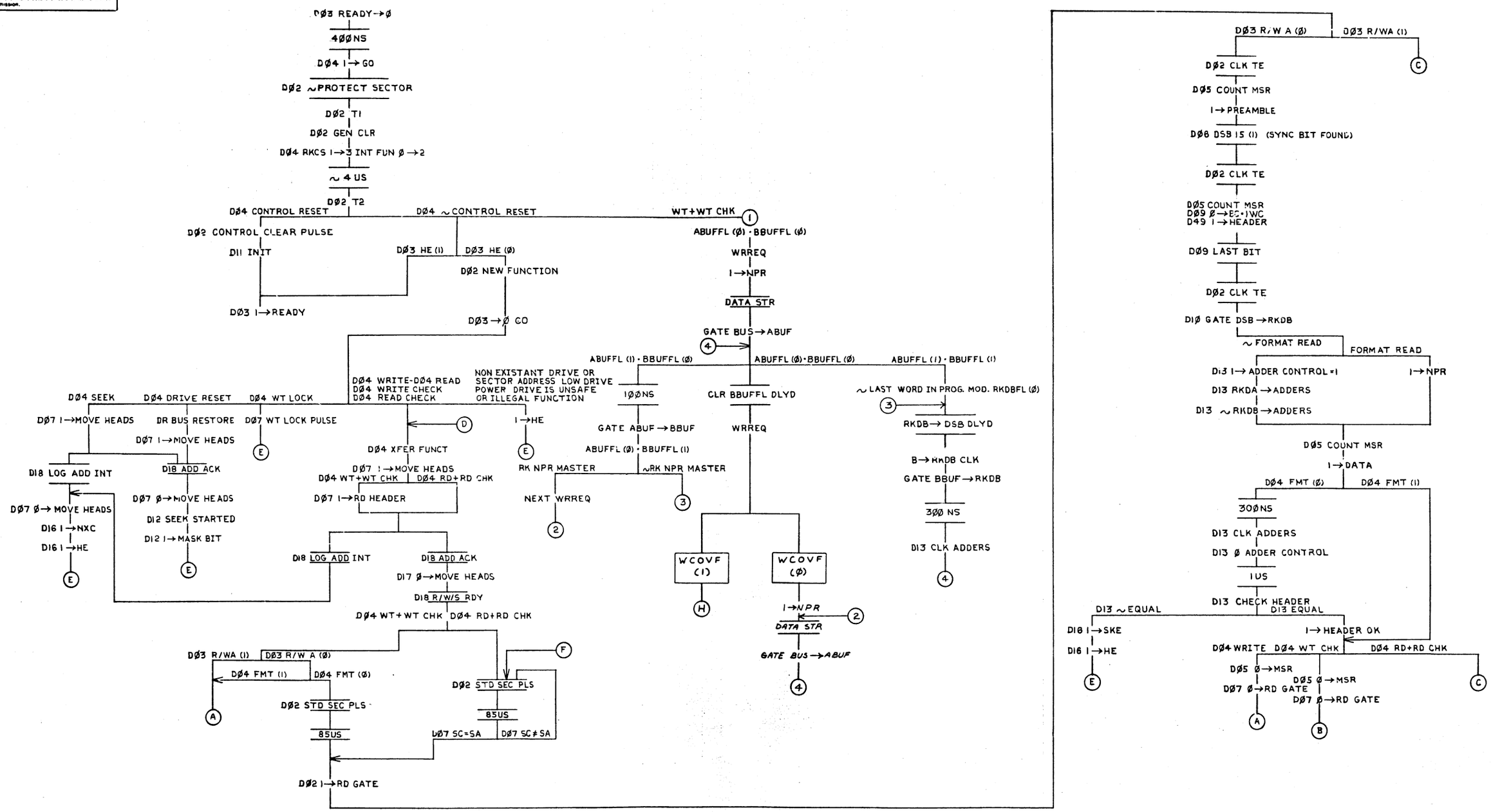

FIRST USED ON OPTION/MODEL	QTY.	DESCRIPTION	PART NO.	ITEM NO.
RKII-C		PARTS LIST		

UNLESS OTHERWISE SPECIFIED DIMENSION IN INCHES. TOLERANCES

DECIMALS	ANGLES
.XXX = .005 .XX = .02 .X = .1	±0° 30'

REMOVE BURRS AND BREAK SHARP CORNERS SURFACE QUALITY ✓

MATERIAL —/—/—

FINISH —/—/—

		DATE
DRN.	A. Justin Ch.	1/4/72
CHK'D.	[illegible]	1/4/72
ENG.	[illegible]	12-18-72
PROJ. ENG.	[illegible]	12-18-72
PROD.	[illegible]	12-18-72

NEXT HIGHER ASSY. A ML 7606257-0

SCALE NONE

SHEET 1 OF 4

digital EQUIPMENT CORPORATION MAYNARD MASSACHUSETTS

TITLE

FUNCTION FLOWS

SIZE	CODE	NUMBER	REV.
D	FD	7606257-0-28	

DIST.

REVISIONS: REV | CHANGE NO. | CHK

BRUNING 40-523 15640

DEC FORM NO DRD 102-B

SIZE D CODE FD NUMBER 7606257-0-28 REV

This drawing and specifications, herein, are the property of Digital Equipment Corporation and shall not be reproduced or copied or used in whole or in part as the basis for the manufacture or sale of items without written permission.

WRITE

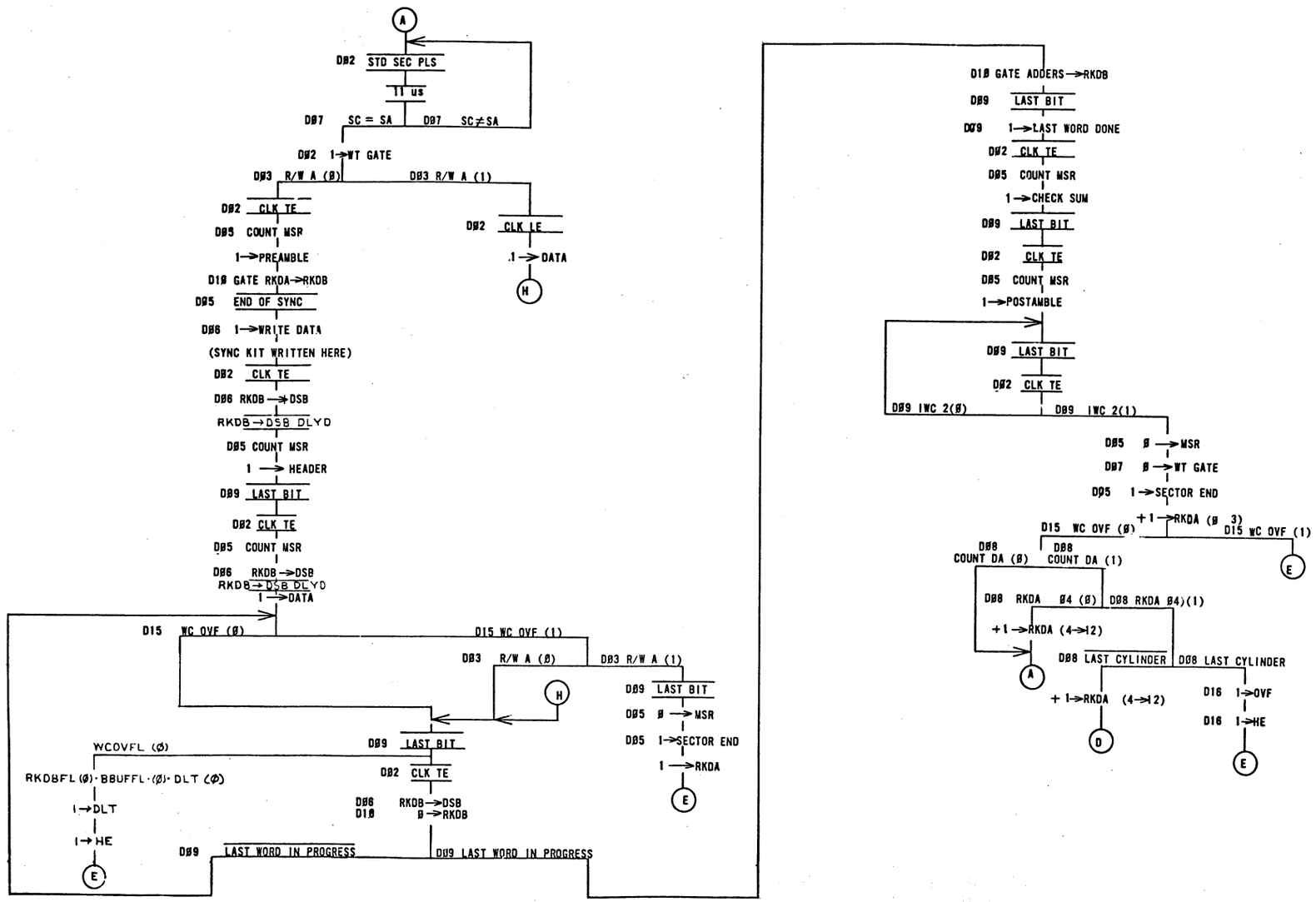

FIRST USED ON OPTION/MODEL	QTY.	DESCRIPTION	PART NO.	ITEM NO.
RK11-C		PARTS LIST		

UNLESS OTHERWISE SPECIFIED DIMENSION IN INCHES. TOLERANCES

DECIMALS	ANGLES
.XXX = .005 .XX = .02 .X = .1	±0° 30'

REMOVE BURRS AND BREAK SHARP CORNERS SURFACE QUALITY ✓

MATERIAL

FINISH

		DATE
DR'N.		10/1/72
CHK'D		12-18-72
ENG.		12-18-72
PROJ. ENG.		12-18-72
PROD.		12-18-72

NEXT HIGHER ASSY.

SCALE NONE

SHEET 2 OF 4

digital EQUIPMENT CORPORATION MAYNARD MASSACHUSETTS

TITLE

FUNCTION FLOWS

SIZE	CODE	NUMBER	REV.
D	FD	7606257-0-28	

DIST.

REVISIONS

REV.	CHANGE NO.	CHK

DEC FORM NO. DRD 100-A

SIZE D CODE FD NUMBER 7606257-0-28 REV.

This drawing and specifications, herein, are the property of Digital Equipment Corporation and shall not be reproduced or copied or used in whole or in part as the basis for the manufacture or sale of items without written permission.

WRITE CHECK

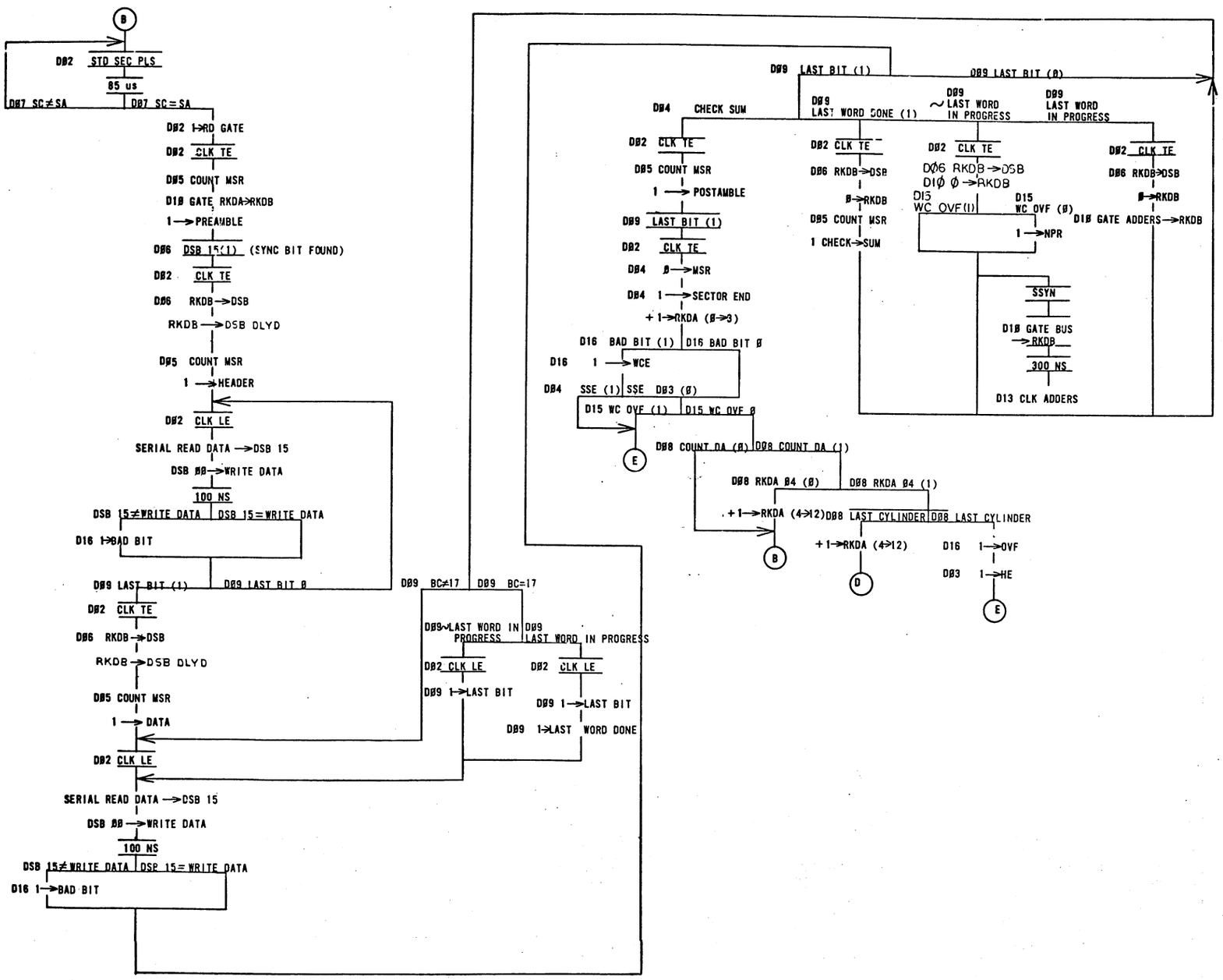

FIRST USED ON OPTION/MODEL	QTY.	DESCRIPTION	PART NO.	ITEM NO.
RK11-C		PARTS LIST		

UNLESS OTHERWISE SPECIFIED DIMENSION IN INCHES. TOLERANCES

DECIMALS	ANGLES
.XXX = .005 .XX = .02 .X = .1	±0° 30'

REMOVE BURRS AND BREAK SHARP CORNERS SURFACE QUALITY ✓

MATERIAL —/—/—

FINISH —/—/—

		DATE
DRN.	A. Pasterelli	11/3/72
CHK'D	[illegible]	12-8-72
ENG.	K.S. Ramachandra	12-7-72
PROJ. ENG.	K.S. Ramachandra	12-7-72
PROD	K.S. Ramachandra	12-7-72

NEXT HIGHER ASSY. —/—/—

SCALE NONE

SHEET 3 OF 4

DIGITAL EQUIPMENT CORPORATION MAYNARD MASSACHUSETTS

TITLE

FUNCTION FLOWS

SIZE	CODE	NUMBER	REV.
D	FD	7606257-0-28	

DIST.

REVISIONS: REV. / CHANGE NO. / CHK

DEC FORM NO. DRD 100-A

This drawing and specifications, herein, are the property of Digital Equipment Corporation and shall not be reproduced or copied or used in whole or in part as the basis for the manufacture or sale of items without written permission.

READ AND READ CHECK

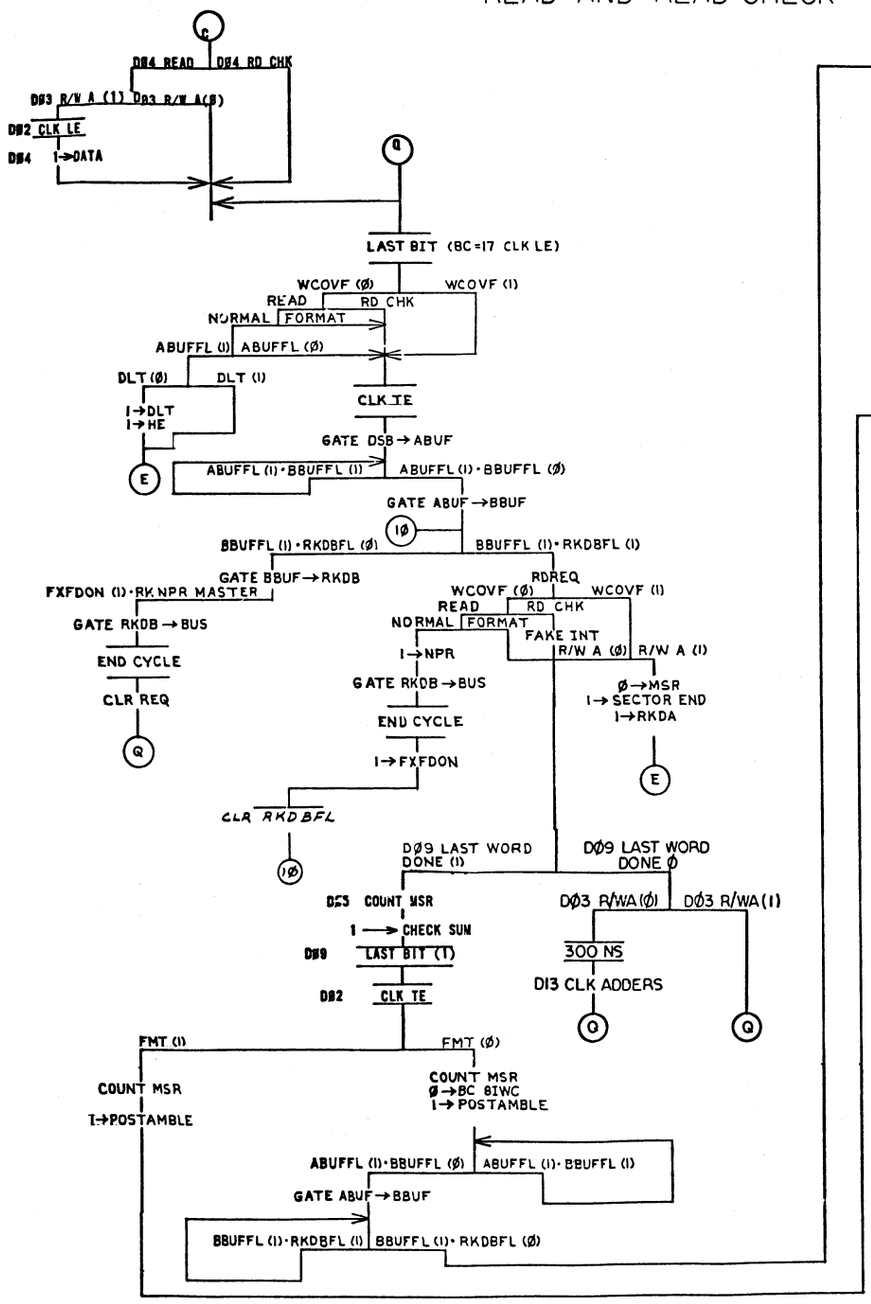

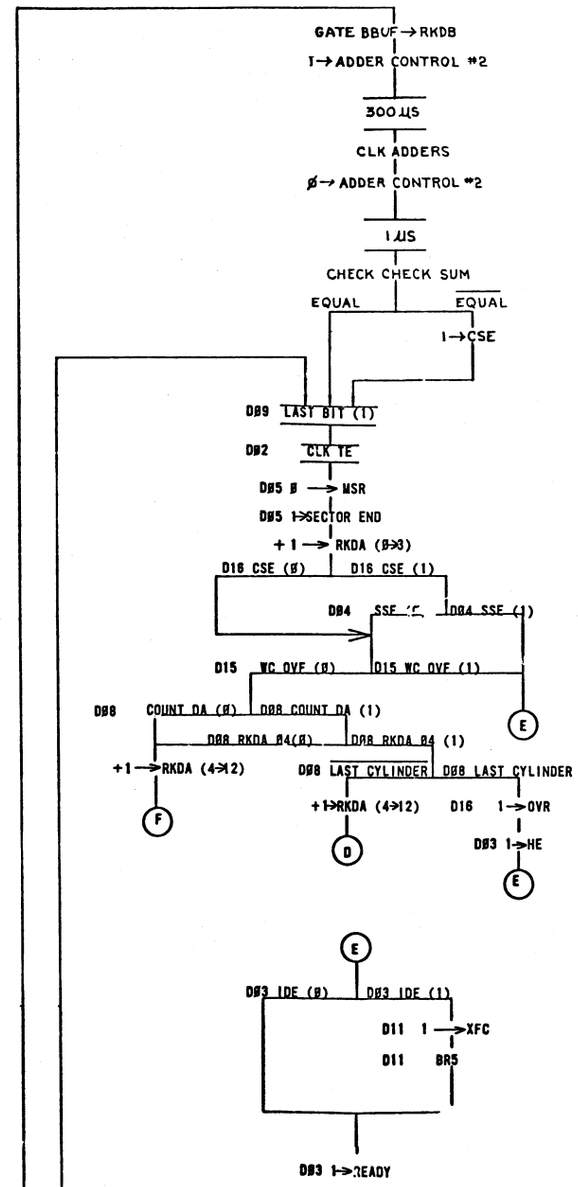

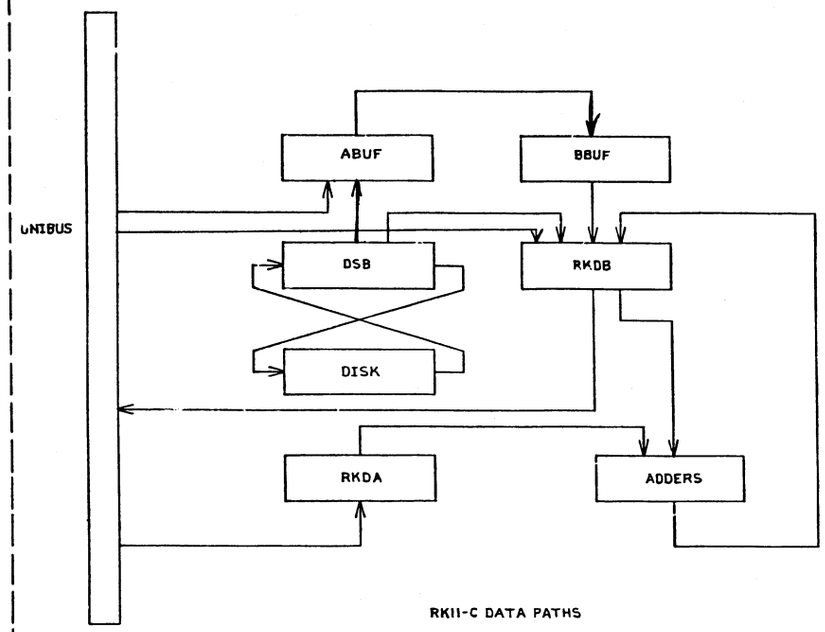

RK11-C DATA PATHS

MAR 9 1973
ISSUED

FIRST USED ON OPTION/MODEL	QTY.	DESCRIPTION	PART NO.	ITEM NO.
RK11-C		PARTS LIST		

UNLESS OTHERWISE SPECIFIED DIMENSION IN INCHES. TOLERANCES

DECIMALS	ANGLES
.XXX = .005 .XX = .02 .X = .1	±0° 30'

REMOVE BURRS AND BREAK SHARP CORNERS SURFACE QUALITY ✓

MATERIAL —/—

FINISH —/—

		DATE
DRN.	A. Mastrelli	11/1/72
CHK'D	[illegible]	12-1-72
ENG.	[illegible]	12-1-72
PROJ. ENG.	[illegible]	12-1-72
PROD.	[illegible]	12-1-72

NEXT HIGHER ASSY. —/—

SCALE NONE

SHEET 4 OF 4

digital EQUIPMENT CORPORATION MAYNARD MASSACHUSETTS

TITLE FUNCTION FLOWS

SIZE	CODE	NUMBER	REV.
D	FD	7606257-0-28	

DIST.

REVISIONS: REV. | CHANGE NO. | CHK

DEC FORM NO DRD 102-B

SIZE D CODE FD NUMBER 7606257-0-28 REV